Inactivation of Pathogenic Microorganisms in Infectious Medical Waste:

A Literature Review of Current On-site Treatment Technologies

by

Anthony DiDomenico

Lieutenant, Civil Engineer Corps, U.S. Navy

A Non-Thesis paper submitted in fulfillment
of the requirement for the degree of

Master of Science in Civil Engineering

University of Washington

1992

Thesis
D305
c.1

TABLE OF CONTENTS

List of Figures iii
List of Tables iv
Introduction 1
Background 2

Chapter I: Infectious Waste Characterization 5
Regulatory Classification 5
Exposure and Risk of Infection for Waste Handlers 10
Pathogenic Microbial Loading 15

Chapter II: Treatment Technologies 18
Kinetics of Thermal Inactivation 18
Thermal Inactivation of Bacterial Endospores 24
Steam Sterilization 27
Mechanical/Chemical Disinfection 42
Microwave Disinfection 49
Destruction by Incineration 53

Chapter III: Conclusion 64

Bibliography 67

ACKNOWLEDGMENTS

I would like to thank Professors Brian Mar, David Stensel, and John Ferguson for their guidance and patience during my graduate program. They have provided me with the tools necessary for independent decision making and opened an entirely new field for me to use for the benefit of our nation. I also thank the Lord for my wife Mary and daughters Jana and Erin who encouraged and supported me during the completion of my degree requirements.

LIST OF FIGURES

Number Page

2-1. Thermal Death Time Curve for *Bacillus stearothermophilus* 19

2-2. Death Survivor Curve at Constant Temperature 21

2-3. Vegetative and Sporulation Cycles in Bacteria 25

2-4. Electron Micrographs of Thin Sections of *Bacillus subtilis* 25

2-5. Gravity Displacement Steam Sterilizer 30

2-6. Time-Temperature Curves for Conditions that Affect Steam Sterilization of Microbiological Waste 34

2-7. San-i-pak High Vacuum Sterilizer/Compactor 40

2-8. Retort Autoclave 41

2-9. Mechanical/Chemical Disinfection Unit 45

2-10. Microwave Disinfection Unit 52

LIST OF TABLES

Number Page

1-1. Types of Wastes Designated as Infectious by Various Entities 6

1-2. Oral Infective Dose of Enteric Bacteria to Humans 13

1-3. Oral Infectivity of Echovirus 12 in Healthy Adults 14

1-4. Comparison of Mean Microbial Concentration 16

1-5. Microorganisms in Various Types of Solid Waste 16

1-6. Indicator Organism Levels in Lysimeters Over 10 Years 17

2-1. Classification of Optimal Growth Temperatures 20

2-2. Theoretical Example of the Order of Death of a Bacterial Population 23

2-3. Sterilization Temperature and Time Standards 30

2-4. Standard Sterilization Times for Hospital Supplies 32

2-5. Temperatures Reached Using Different Waste Containers 36

2-6. Mean Concentration of Chemical By-products from Medical Safe TEC process 46

2-7. Inactivation of *E. coli* by Microwaves with Ice Added to the Bacterial Suspension 49

2-8. Effect of Microwave Radiation (2,450 M-Hz) on Microbes in the Lyophilized State and after Moistening 50

2-9. Biomedical Waste Combustion Characteristics 54

2-10. Ash Deformation Temperatures from Burning Solid Waste 55

2-11. Ranges of Regulations for TSP and HCl in the U.S. 56

2-12. Chemical Composition of Waste and Products from Incineration 57

2-13. Composition of Infectious and Typical Municipal Wastes 58

2-14. Percentages of Plastic in Waste 58

2-15. Emission of Airborne Bacteria from a Hospital Incinerator 63

Introduction

The objective of this research paper was to enable me to understand the principles of microbial destruction and inactivation that occurs during the treatment of infectious medical waste. Upon completion of my MSCE program I will be assigned as the Environmental Facilities officer for the Bureau of Naval Medicine and Surgery in Washington, DC. My job description includes planning, programming, and execution of environmental compliance projects unique to Navy and Marine Corps health care facilities worldwide. Therefore, a basic understanding of microbial sterilization and disinfection principles will provide me with the tools necessary to recommend capital equipment purchases and assist in the development of infectious waste treatment programs.

My approach during this research project was to ensure that I understood the basic mechanisms responsible for inactivation of the microbial cell prior to comparing the treatment technologies available. With this completed, I was then capable of objectively reviewing the manufacturer's literature which supported their particular technology. I decided to review only on-site infectious waste treatment systems that were currently in full-scale operation at health care facilities. This resulted in narrowing the review to steam sterilization, mechanical/chemical and microwave disinfection, and on-site incineration systems. Additionally, I decided to take this opportunity while at graduate school to focus on the technical issues surrounding this topic. My continued career path as a facilities engineer/manager in the Navy Civil Engineer Corps will allow me to complement this paper with the details of federal and state infectious waste regulations.

Background

The Medical Waste Tracking Act was signed into law November 1, 1988 in response to the televised news reports of infectious medical waste washing up on the beaches of the east coast. This law directed the Environmental Protection Agency (EPA) to establish a two-year demonstration program for tracking medical wastes from generation to final disposal. This Act amended the Resource Conservation and Recovery Act (RCRA) by adding Subtitle J. Participating in the program were the states of Connecticut, New Jersey, New York, Rhode Island, and the Commonwealth of Puerto Rico. A wide range of medical waste regulations have since been enacted by the various states still in the absence of any evidence that medical waste has caused an infection in any person outside a health care facility.

Infectious waste treatment is achieved either through destruction, such as incineration, or inactivation, which involves killing microorganisms using heat, chemicals, or radiation without disintegrating the cells. Analogous to the RCRA definition of hazardous waste being a subset of solid waste, infectious waste is a subset of medical waste. Infectious disease transmission has four requirements: a pathogen must be present; a sufficient number and virulence of pathogens to cause infection must also be present; a susceptible host must be available; and a pathogen-specific, appropriate portal of entry into the susceptible host must exist or be created. Infection of the host does not always result in disease (U.S. Department of Health and Human Services, 1990).

At the Joint Services Health Care Facilities Symposium, Doucet (1992) predicted that over the next three to five years there will continue to be a demand for new and better infectious medical waste treatment systems. During this period, state regulations should stabilize and allow for different infectious waste systems to be installed. Data gathered on actual applications should provide the information needed to determine viable alternatives among the new technologies. In addition, Doucet (1992) predicts that continued improvements and advancements in the older technologies of incineration and steam sterilization will be made.

In a report published by Future Technology Surveys (1992), seven biomedical waste industry panelists expressed their views on the markets, trends and opportunities for the next five years. All were in agreement that there will be growth for the future. Total biomedical waste market disposal and operating expenses, not including capital expenditures, was estimated to be $400 million in 1991, and projected to increase to $1 billion in 1996. The most significant trends predicted for the next five years include: additional on-site incinerators shutting down due to non-compliance; increased use of consulting firms; and regional waste management agreements and plants constructed for health care facilities (Infectious Waste News, 1992).

In the Society for Hospital Epidemiology of America position paper on medical waste and the MWTA, Rutala and Mayhall (1992) made the following conclusions based upon the scientific literature reviewed:

- Over 99% of the waste that washes up on the beaches is general debris, not medical waste. The majority of the medical waste that washed up on the beaches of the east coast during the summers of 1987 and 1988 was generated from in-home health and hospice care and illicit intravenous drug users.

- Based on a combination of HIV prevalence in New York drug abusers, virus degradation rates following ambient air exposure, number of visits to New York area beaches, reported rates of needlestick injuries, and the risk of HIV infection following HIV-contaminated percutaneous needlestick injury in health care workers; a maximum theoretical risk of HIV infection is estimated to be 1.0×10^{-10} which is well below the EPA acceptable risk factor of 1.0×10^{-6} for carcinogenic substance exposures.

- There is no scientific evidence that a waste industry worker has ever contacted an infection from handling medical waste.

- When reviewing the epidemiological and microbiological data comparing infectious waste to municipal solid waste, only two categories, sharps and microbiological cultures, should require special handling and treatment.

- Implementation of the Medical Waste Tracking Act nationwide would result in an extrodinary increase in medical waste disposal costs with no environmental or public health benefit. Some of the waste categories listed in this law require tracking and special treatment because they are considered displeasing to the public. The New York University Hospital reported that in order to comply with MWTA, the amount of regulated medical waste to be tracked and receive special treatment increased from 443,000 lbs in 1984 to 1,837,000 lbs in 1989. Total costs for the regulated, or infectious portion of their medical waste stream increased from $106,000 to $835,000 per year (Marchese *et al.*, 1990).

The effective dates for the Medical Waste Tracking Act were from June 1989 to June 1991. Congress decided not to extend this act another two years until 1993. It is hoped that in 1993, when RCRA is scheduled to be reauthorized, that realistic legislation will be promulgated in Subtitle J which will protect the public from the actual hazards of infectious waste versus the perceived public risks.

Chapter I: Infectious Waste Characterization

Regulatory Classification

The composition of infectious medical waste, even when properly segregated, is as heterogeneous as municipal solid waste. A study of 1,022 lbs of red bag infectious waste from two hospitals in the Houston area revealed that the majority of the bulk consists of disposable gowns and surgical drapes. Also reported were paper plates, brown paper bags, cigarette packages, and food wrappings. Approximately 14.2% of the waste by weight consisted of plastics, 9.4% of that being polyvinyl chloride (Marrack, 1988). Tieszen and Gruenberg (1992) quantitatively evaluated the contents of waste generated from five types of surgical operations on the heart, back, abdomen, hip or knee, and hernia. Of the 27 cases evaluated, disposable surgical drapes, gowns, and wraps accounted for 53% of the waste by volume.

The focus of concern is on the portion of the medical waste stream that has been designated as infectious. The U.S. Environmental Protection Agency (EPA) and the Centers for Disease Control (CDC) agree that the general definition of infectious waste is one that must contain pathogens of sufficient quantity and virulence so that exposure to the waste by a susceptible host could result in an infectious disease. Table 1-1 shows that these two government entities only agree together with six out of the eleven individual designations of infectious waste. The optional designation states that the decision to handle the waste category as infectious should be made by a responsible, authorized person or committee at the individual health care facility. How infectious waste categories are defined by health care institutions can greatly affect the cost and choice of disposal options. It appears from the percentages that hospitals have taken a conservative approach by designating most of the categories as infectious.

Table 1-1. Types of Wastes Designated as Infectious by Various Entities.

Category	EPA	CDC	% of Hospitals
Isolation wastes	Yes	Optional	94.4
Cultures, stocks, associated biologicals	Yes	Yes	99.0
Human blood and blood products	Yes	Yes	93.7
Pathological wastes	Yes	Yes	95.6
Contaminated sharps	Yes	Yes	98.6
Animal carcasses, body parts, bedding	Yes	Yes	90.1
Wastes from surgery and autopsy	Optional	No	85.0
Contaminated laboratory wastes	Optional	No	88.8
Dialysis unit wastes	Optional	No	83.4
Contaminated equipment	Optional	No	Case by case
Unused sharps	No	No	Physical hazard

(Source: OTA, 1990)

The State of Washington has defined infectious waste based on risk criteria and use a determination of "infectious disease causation potential." Using this approach a special regulation might be promulgated if a consensus is reached that the particular medical waste - given organism concentration, ability of the waste to penetrate skin, etc. - poses a risk beyond that associated with municipal solid waste to transmit infectious disease.

A detailed description and EPA (1986) recommend treatment technology for each of the waste categories listed in Table 1-1 is provided:

Isolation wastes - biological waste and discarded materials contaminated with blood, excretion, excudates or secretion from human beings or animals who are isolated to protect others from communicable diseases.

- Although EPA created this separate category, many health care facilities follow the 1987 CDC "Universal Precautions" guideline. Under this guideline blood and certain body fluids of all patients are considered potentially infectious for Human Immunodeficiency Virus (HIV), Hepatitis B Virus (HBV), and other bloodborne pathogens which are recommended to be either steam sterilized or incinerated. CDC universal

precautions do not apply to feces, nasal secretions, sputum, sweat, tears, urine, and vomitus body fluids unless they contain visible blood. These body fluids are recommended to be discharged to the sanitary sewer through the patient care area.

Cultures, stocks of infectious agents, and associated biologicals - including cultures from research and industrial laboratories, wastes from the production of biologicals, discarded live and attenuated vaccines, and culture dishes and devices used to transfer, inoculate, and mix cultures.

- General management practice has been to sterilize the cultures and stocks in the laboratory spaces before placing these items in red bags due to the presence of large numbers of microorganisms at very high concentrations. Incineration and thermal inactivation are also recommended treatment technologies.

Human blood and blood products - including serum, plasma, and other blood components.

- The 1987 CDC "Universal Precautions" guidelines would also apply for this category. EPA recommends incineration, or steam sterilization followed by direct discharge to the sewer provided that secondary treatment is in place at the Publicly Owned Treatment Works (POTW). Blood contaminated laboratory glassware, microscope slides and cover slips would be handled as a contaminated sharp item.

Pathological wastes - including tissues, organs, and body parts that are removed during surgery or autopsy.

- In addition to the infectious potential of the body tissues, recognizable body parts require special disposal handling for aesthetic reasons. Incineration is the recommended treatment method to eliminate both the infectious and aesthetic characteristics of the waste. Some hospitals without incineration capability contract with a mortician for disposal of pathological wastes by cremation or burial. Steam sterilization followed by

grinding and discharge to a secondary treatment POTW is another recommended alternative.

Contaminated sharps - including hypodermic needles, syringes, pasteur pipettes, broken glass, and scalpel blades.

- EPA recommends a single uniform policy for both contaminated and unused sharps. When discarded they should be in a rigid, puncture resistant locked container with a narrow opening to prevent the retrieval of the discarded needles and syringes. An ASTM subcommittee is currently developing a standard for puncture resistance in needle disposal containers. Incineration and/or steam sterilization followed by compaction is recommended to eliminate the infectious potential and the risk of injury to waste handlers.

Contaminated animal carcasses, body parts, and bedding - for animals that were exposed to infectious agents during research, production of biologicals, or testing of pharmaceuticals.

- The recommended treatment methods are similar to pathological wastes. Steam sterilization can be used to treat small carcasses or to decontaminate the surface of large animals before they are transported to the incinerator or the grinder-sewer system. Incineration is the recommended treatment method for contaminated animal bedding since its insulating properties can impede steam sterilization.

Wastes from surgery or autopsy - when in contact with infectious agents, including soiled dressings, sponges, drapes, lavage tubes, drainage sets, underpads, and surgical gloves.

Dialysis unit wastes - that were in contact with the blood of patients undergoing hemodialysis, including contaminated disposable equipment, and supplies such as tubing, filters, disposable sheets towels, gloves, aprons, and laboratory coats.

- Reinhardt and Gordon (1991) recommend that an infectious waste audit be performed by the health care facility administrators with the assistance of the infection control practioner to further classify both these categories as follows:

Never infectious (regardless of the patient disease, type of care, or surgery)

- Outer wrappers of supplies
- Materials that were not in contact with patient blood, body fluids, secretions, or excretions.

Always infectious

- Material that are grossly soiled with patient blood, body fluids, secretions, or excretions.

Sometimes infectious

- Materials that are lightly soiled with patient blood, body fluids, secretions, or excretions.

Contaminated laboratory wastes - from medical, pathological, pharmaceutical, or other research, commercial, or industrial laboratories that were in contact with infectious agents, including slides, cover slips, disposable gloves, laboratory coats, and aprons.

- Incineration is the recommended technology in order to treat the infectiousness, as well as destroying the material and labels.

Contaminated equipment - discarded medical equipment and parts that were in contact with infectious agents.

- Recommended treatment method is to steam sterilize if the item can fit into the autoclave, or in-situ gas or vapor sterilization if the equipment item is large.

EPA encourages treatment of regulated medical waste as early in the vaste management chain as possible. The definition of treatment is stated in he Medical Waste Tracking Act (1988) as follows:

> 40 CFR 259.30 (b)(1)(iv) - "Ensure that the concentration of microorganisms capable of causing disease in humans is reduced so as to render such waste as non-infectious or less infectious and, thus, safer to handle, transport, and dispose of. However, the waste need not be sterilized. The treatment processes commonly available are not 100% effective in inactivating microorganisms. Complete inactivation is unnecessary, since any refuse is expected to support some level of bacterial activity. Destruction of the waste is satisfied when the waste is ruined, torn apart, or mutilated so that it is no longer recognizable as medical waste."

For those states that were covered by the Medical Waste Tracking Act, nanifesting regulated waste was not necessary if it could be determined that ll of EPA's concerns, biological and physical hazards and aesthetic degradation had been accomplished.

Exposure and Risk of Infection for Waste Handlers

The following scenario of a housekeeping staff handling infectious red bag waste is used to provide simplified definitions of terminology used in the paper.

A person fails to wear gloves when handling red bag infectious waste. In the event that the bag ruptures and their hand comes into contact with blood soaked dressings, both the hand and the loading dock floor becomes contaminated with *staphylococci*. This individual does not immediately wash their hands and the *staphylococci* comes into contact with a small cut. Given that sufficient number of these pathogenic organisms are present at this portal of entry this small cut becomes reddened and the host could be infected at this point. If this individual continues to ignore the reddened area around the cut and the original contamination consisted of enough

staphylococci to overcome the body's natural defense mechanisms, this area could develop into a boil. At this point disease has occurred which is defined a disturbance in the state of health of the host.

The more likely scenario is as follows: the individual would go to the nearest sink and use the health care antimicrobial soap which is a safe, nonirritating preparation designed for frequent use in order to reduce the number of transient microorganisms on intact skin to an initial baseline level after adequate washing, rinsing, and drying. Realizing that the small cut on his hand may have also come into contact with the waste the individual may use an antiseptic substance (to be used on human or animal bodies only) that prevents or arrests the growth or action of microbes by inactivation. At the same time another housekeeping staff member has been assigned to clean up the contents of the spilled bag. The proper chemical disinfectant (for inanimate objects only) is selected, based on the composition of the floor material, to kill, not just inhibit, the microbes in the vegetative stage. But this does not necessarily kill bacterial spores. Solid objects of the spilled waste are placed in another red bag and carried to the pre-vacuum autoclave treatment unit where the waste is sterilized, which inactivates all forms of microbial life.

In an occupational setting microorganisms can enter the body through he mouth, lungs, broken or unbroken skin or the mucous membrane lining of the inner surface of the eyelids. In the event that the contents of a nfectious waste red bag is spilled and not properly cleaned up, the surface it omes in contact with may remain contaminated for some time. These rganisms can then be transferred by the fingers to the mouth or eyes. Some of the cuts and abrasions to the skin are not visible to the naked eye. Dried ultures on the outside of a flask were responsible for seven infections and ne death by coccidioidomycosis according to Smith and Harrell, (1948).

Infectious air-borne particles can be produced from atomized liquids in which the bacteria remain in a dried state as droplet nuclei. Fugitive particles could be released when dried bacterial colonies on stoppers, or caps of tubes nd culture dishes are dislodged and opened. Although to initiate infection, much depends on the density, size and the degree of aggregation of the

particles in order to be able to bypass the protective mechanisms of the nose and reach the alveoli. In 1946, in a U.S Army Laboratory there were 20 cases of Q fever in three months among the staff and visitors as a result of infected particles generated from the harvesting, homogenizing and centrifuging of the organisms studied and subsequent dispersal around the building by air currents (Collins, 1983).

Generally, the severity of the human response is proportional to the dose of the pathogen that the individual is exposed to. Dose-response relationships with respect to pathogens in humans is either an exposure resulting in no infection, infection without any clinical signs of illness, or infection with clinical signs of illness. An increasing proportion of the subjects are affected as the dose increases. Depending on age and general health of an individual, a dose which is infective in one individual, may cause a more severe response and disease in a second individual, at the same time have no effect on a third individual within the test group. At risk populations consisting of infants, the elderly, malnourished people, and persons taking immunosuppressant drugs would be more susceptible to infection than the majority of the normal population (Pahren, 1987).

Table 1-2 summarizes the number of infectious particles that are required to overcome the human defense mechanisms of alveolar macrophages and leukocyctes in the lungs, and acidity and digestive enzymes in the stomach. The results also demonstrate that buffering reduces the infective dose for cholera by an order of magnitude.

Exposure to a low dose of a pathogen produces varying degrees of immunity. Repeated ingestion of 10^3 to 10^4 of *Vibrio chloerae* given to adults in Bangladesh produced subclinical and mild diarrhea infections which resulted in production of a specific antiboby against the bacteria. Therefore, the peak incidence of endemic cholera in Bangladesh is found to occur in the 1 to 4 year-old age group and decreases with age as immunity develops (Levine, 1980).

Table 1-2. Oral Infective Dose of Enteric Bacteria to Humans.

Bacterium	No infection or no illness	Volunteers developing illness			
		1%-25%	26%-50%	51%-75%	76%-100%
Escherichia coli	10^4	10^6	10^8	10^8 - 10^{10}	10^{10}
Salmonella typhi	10^3	10^5	10^5 - 10^8		10^8 - 10^9
Shigella dysentariae		10 - 10^2	10^2 - 10^4	10^3	10^4
Streptococcus feacalis	10^8	10^9	10^{10}		
Vibrio cholerae					
Buffered	10		10^3 - 10^8	10^4 - 10^6	
Unbuffered	10^4 - 10^{10}		10^8- 10^{11}		

(Source: Kowal, 1982)

Human defense mechanisms in the intestine can resist colonization of an oral dose up to approximately 10^6 microorganisms due to its normal content of anaerobic bacteria and their products. This resistance is reduced when oral antibiotics are administered, then the number of microorganisms required can be as low as 10 or 100 to induce colonization.

Edberg (1981) reviewed significant quantitative microbiological studies addressing human infection in wounds, the urinary tract, the lungs, and the central nervous system. Results of the research reviewed supported the finding that when the bacterial load in any area of the body, regardless of species of the microbe, reaches levels of 10^6 or more per gram of human tissue, then infection or tissue destruction occurs. Generally, below 10^5 (colony forming units) CFU/ml of body fluid the normal healthy body will be able to counter the proliferation of a pathogenic microbe. Due to the defense mechanisms of the body, inflammation in the area of contamination may occur from the movement of phagocytes, which are deployed to engulf the foreign microbes. Bacterial counts in the range of 10^9 to 10^{10} CFU/ml have been found to occur in the pus of an abscess, which is an accumulation of dead phagocytes and the microbes they have engulfed, along with tissue debris that may have been damaged as a result of the infection. Edberg (1981) concluded that although the target number of 10^6 microorganisms was found

to be applicable to the four body sites reviewed, this finding must be considered a general approximation and not a specific number to rely upon.

Viruses are intracellular parasites and only reproduce when they have invaded host cells. Once inside a cell, viruses cause observable changes collectively called a cytopathic effect. Viruses can inactivate the cell by causing the enzymes from cellular lysomes to be released, or by stopping the synthesis of cell protein or other macromolecules. The dose for viruses is expressed as the dilution of virus sufficient to cause a cytopathic effect in 50% of the inoculated monolayer cell cultures (cultures that contain a layer of cells one cell deep). The terminology used is tissue culture infectious dose ($TCID_{50}$), or described as plaque-forming units (PFU) which is an approximate count of the clear areas in the regions of the monolayer culture where the viruses have lysed the cells (Creager *et al.*, 1990). Plotkin and Katz (1967) reported that only 1 $TCID_{50}$ of attenuated poliovirus was infective for premature infants that were fed through nasogastric tubes. This result is often quoted to support the position that only one virus microorganism is needed to cause an infection in humans (Pahren, 1987). Table 1-3 shows the results of a study of oral infectivity of echovirus 12 in healthy adults.

Table 1-3. Oral Infectivity of Echovirus 12 in Healthy Adults

Dose (PFU)	No. subjects	No. infected	%
0	34	0	0
10	50	15	30%
30	20	9	45%
100	26	19	73%
300	12	12	100%

(Source: Schiff *et al.*, 1983)

Using a probit analysis, Schiff *et al.* (1983), inferred that 1 to 2 PFU would be capable of infecting 1 to 2% of a susceptible population.

Five out of 1,320 health care workers experiencing HIV contaminated sharps injuries have been reported to seroconvert; produce antibodies as a result of the reaction with HIV. In the same survey no HIV seroconversions

were reported to occur after 921 documented cases of mucous membrane contacts with blood or body fluids from HIV-infected patients (Henderson, 1990). The Department of Health and Human Services (1990) concluded that human contact with HIV contaminated waste outside of the patient care setting would have a very low potential for infection due to the viability of the virus. On the other hand the hepatitis B virus (HBV), does remain viable for an extended time outside of the host and the potential for infection is higher than HIV. Therefore, under the OSHA Bloodborne Pathogen standard (1991) health care facilities are required to offer free hepatitis B vaccinations to all employees who have occupational exposure to blood and other potentially infectious materials, including medical waste.

Pathogenic Microbial Loading

In a microbial examination of hospital solid wastes at the University of West Virginia Medical Center both the intensive care and pediatrics units were found to generate refuse with the highest coliform counts. *Bacillus* species consisted of 80 - 90% of all microbes detected. The most prominent pathogen detected in the waste was *staphylococcus* (Trigg, 1971). Population densities of *staphylococci, streptococci,* and *tubercle bacilli* have been detected to be as high as 10^8 or 10^9 per ml of emulsified human tissue from infected lesions (McDermott, 1958).

Kalinowski *et al.* (1983) reported that the concentration from various hospital waste stations were 10 to 100,000 times less than the microbial contamination found in municipal solid waste. Trost and Filip (1985) conducted a one year investigation of the waste generated from various medical consulting rooms, dentists and veterinarians. They concluded that waste generated from health care facilities should be handled with caution, but results of the study did not indicate this waste is a source of the acute hygienic risk as reported by the media. Table 1-4 shows that in general, the waste from these health care facilities had lower microbial counts as compared to municipal solid waste.

Table 1-4. Comparison of Mean Microbial Conc (# organisms/gram)

Microorganism	Patient Care	Dentists	Veterinarians	Municipal
Total aerobic bacteria	5.1×10^5	7.8×10^6	4.8×10^7	6.1×10^8
E. coli	9.7×10^2	1.1×10^3	6.9×10^6	2.3×10^3
Faecal streptococci	2.2×10^4	2.9×10^3	4.2×10^6	6.8×10^4
Coliform bacteria	5.6×10^3	2.1×10^6	1.4×10^4	8.4×10^6
Aerobic spore forming	4.0×10^3	5.0×10^2	1.0×10^4	1.4×10^5

(Source: Trost and Filip, 1985)

Jager *et al.* (1989) suspended and microbiologically examined entire waste loads from operating rooms of hospitals and private households. The count of gram-negative rods in the household waste was four orders of magnitude higher than the counts from the hospital generated infectious waste. This study recommended that within the hospital, special hygienic measures should be used, but outside of the hospital both infectious waste and municipal solid waste could be disposed of together.

Table 1-5 reports that microbial densities for undigested sewage sludge, hospital wastes, and municipal solid wastes were equivalent.

Table 1-5. Microorganisms in Various Types of Solid Wastes.

Microbes (#/g)	Sewage sludge	Hospital wastes	Municipal wastes
Total coliforms	2.8×10^9	9.0×10^8	7.7×10^8
Fecal coliforms	2.4×10^8	9.0×10^8	4.7×10^8
Fecal streptococci	3.3×10^7	8.6×10^8	2.5×10^9
Total plate count	1.7×10^8	3.8×10^8	4.3×10^9

(Source: Donnelly and Scarpino, 1984)

With the exception of pathological and microbiological laboratory cultures, some of the wastes now categorized as infectious were routinely disposed of in sanitary landfills along with general housekeeping waste in the past. Kinman *et al.* (1986) quantified the microorganism levels at the end of a EPA study using 19 large lysimeters (simulated landfill devices for determining the solubility of the waste). Table 1-6 shows that after a period of

10 years the field sampling have not detected bacterial counts of significant quantities in landfill leachate to be a source of potential human infection.

Table 1-6. Indicator Organism Levels in Lysimeters Over 10 Years.

	Colonies/gram of wet refuse		
Microorganism	Initial count	2-year count	10-year count
Total coliforms	6.2×10^8	5.6×10^4	1.4×10^3
Fecal coliforms	2.6×10^7	5.6×10^3	< 0.2
Fecal streptococci	1.4×10^8	1.6×10^4	2.4×10^2

(Source: Kinman *et al.*, 1986)

Sobsey (1978) conducted a field survey of 21 landfill sites in the U.S. and Canada and reported only two infectious poliovirus per 11.8 gallons of raw leachate sample which happened to be from an improperly operated landfill. In addition only two samples had fecal coliform densities exceeding 1000/100ml. Sobsey (1978) concluded that leachates from properly operated landfills do not constitute a public health hazard since the low concentrations found would be further reduced by thermal inactivation, removal in soil, and dilution in ground and surface waters.

Chapter II: Treatment Technologies

Kinetics of Thermal Destruction

Thermal destruction of microorganisms involves a molecular energy state that prevents the individual cells from reproducing and disrupts cellular metabolic systems. Microorganisms are considered dead when there is no sign of growth given suitable conditions for reproduction (Pflug, 1991). Thermal energy affects the entire bacterial cell externally and every molecule and reaction within the cell. Valid quantitative comparisons of the thermal destruction rates between different populations of the same species can only be made if environmental influences before, during and after treatment are controlled. Effects of age, incubation temperature, and nutrient medium before treatment and variables of pH, ionic strength, carbohydrate, protein, and fat content of the substrate during and after heat treatment can produce different degrees of resistant vegetative and spore forming microorganisms (Brown, 1971; Pflug, 1991). Heat destruction comparisons between different bacterial species can not be made unless the environmental factors are comparably the same.

While studying bacterial spores, C. A. Magoon (1926), used the term "thermal death point" to represent the lowest temperature at which an aqueous suspension of bacteria were killed in 10 minutes. This term neglected environmental influences or the psysiological state of the microorganisms. Subsequent research proved that the death of the microorganisms is more likely due to a number of activities over time and varying temperatures which caused irreversible coagulation of cellular protein. Therefore the more accurate term used today is "thermal death time-temperature" which represents the shortest period of time necessary to inactivate all of a known population of microorganisms in a specific suspension at a given temperature (Perkins, 1969).

Figure 2-1 shows the thermal death time curve which is the relative resistance of organisms to different lethal temperatures.

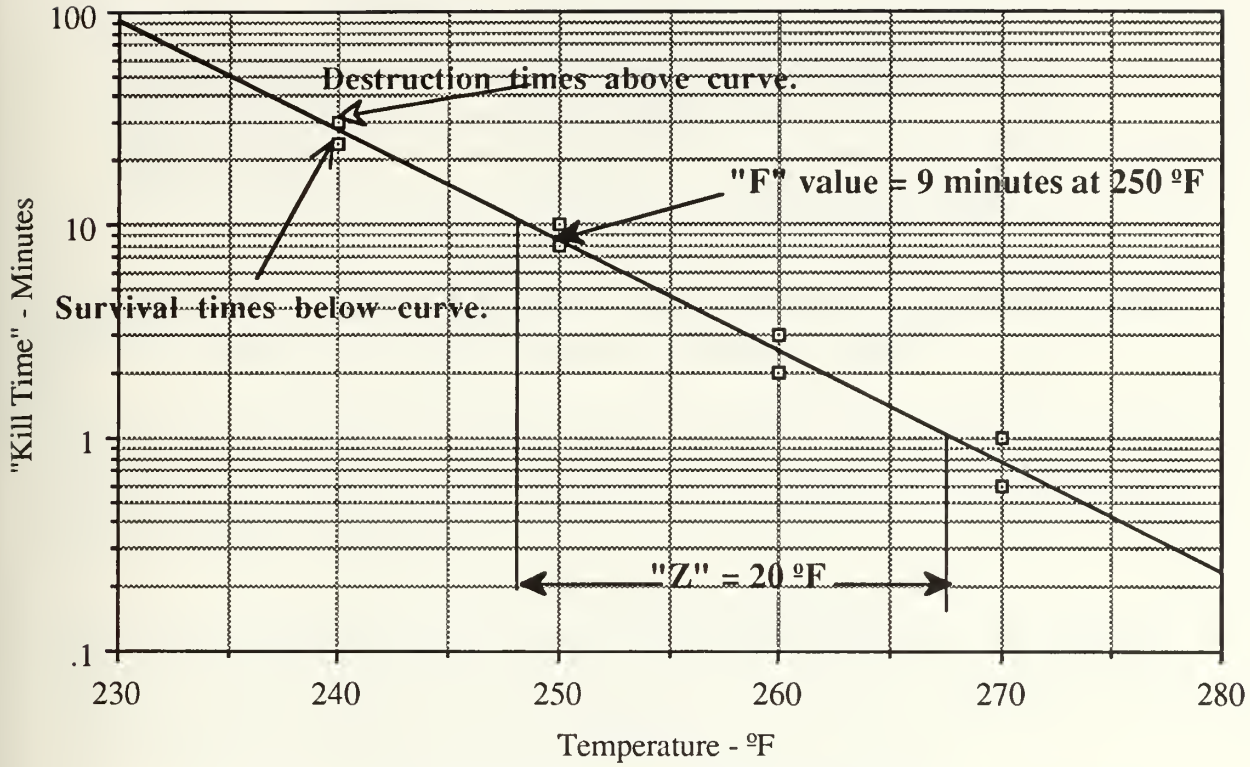

THERMAL DEATH TIME CURVE

Figure 2-1. Thermal Death Time Curve for *Bacillus stearothermophilus* at 100,000 population of dried spores (Perkins, 1969).

"Z" is defined as the number of degrees required for the curve to traverse one log cycle. This value can also be used as the equivalent number of degrees the temperature must be raised or lowered from a given reference temperature which causes a tenfold increase or decrease in the destruction time. Resistant bacterial spores have Z ranges between 10º C to 15º C with an average of 11º C. The "F" value gives one point on the curve (9 minutes @ 250º F) which is sufficient to characterize thermal resistance of spores.

Using the following optimal growth temperatures in Table 2-1, it appears that the majority of human and mammalian pathogenic bacteria can be classified as mesophiles.

Table 2-1. Classification of Optimal Growth Temperatures.

Classification	Optimum Growth Temperature
Psychrophilic	0º C to 20º C
Mesophilic	20º C to 45º C
Thermophilic	> 45º C

(Source: Stanier *et al.* 1986)

Reviewing the works of Perkins (1969) and Brown (1971), the following generalizations can be made with respect to thermal kinetics:

- The rate of inactivating bacteria (both vegetative and spores) is directly proportional to the moisture content of the medium, and, in general, follows exponential kinetics.

- The time of exposure to a particular temperature necessary to sterilize a definite concentration of microorganisms in a particular medium can be characterized by a specific thermal death time or "F" value.

- The time of exposure necessary to reduce the number of surviving microorganisms by 10% is defined as "D" value.

It is not known whether the logarithmic order of death is due to a single molecular reaction or protein denaturation. As early as 1910, Chick and Martin described protein denaturation as a monomolecular reaction with water in which the proteins coagulate or precipitate. This is analogous to heat transforming the raw egg medium into a rigid egg white. Subsequent studies have concluded that the spatial structure of proteins and nucleic acids are maintained by molecular hydrogen bonds. Cavalieri and Rosenberg (1957) determined that these hydrogen bonds in DNA can be cleaved by either heat or chemical processes "until a certain minimum number of intact H-bonds remains." Exceeding this minimum number results in a spontaneous cleavage of the remaining H-bonds and irreversible denaturation; loss of the ability to reproduce.

An empirical thermal death survivor curve has been developed, as shown in the figure 2-2 by plotting the number of viable survivors against the heat exposure time.

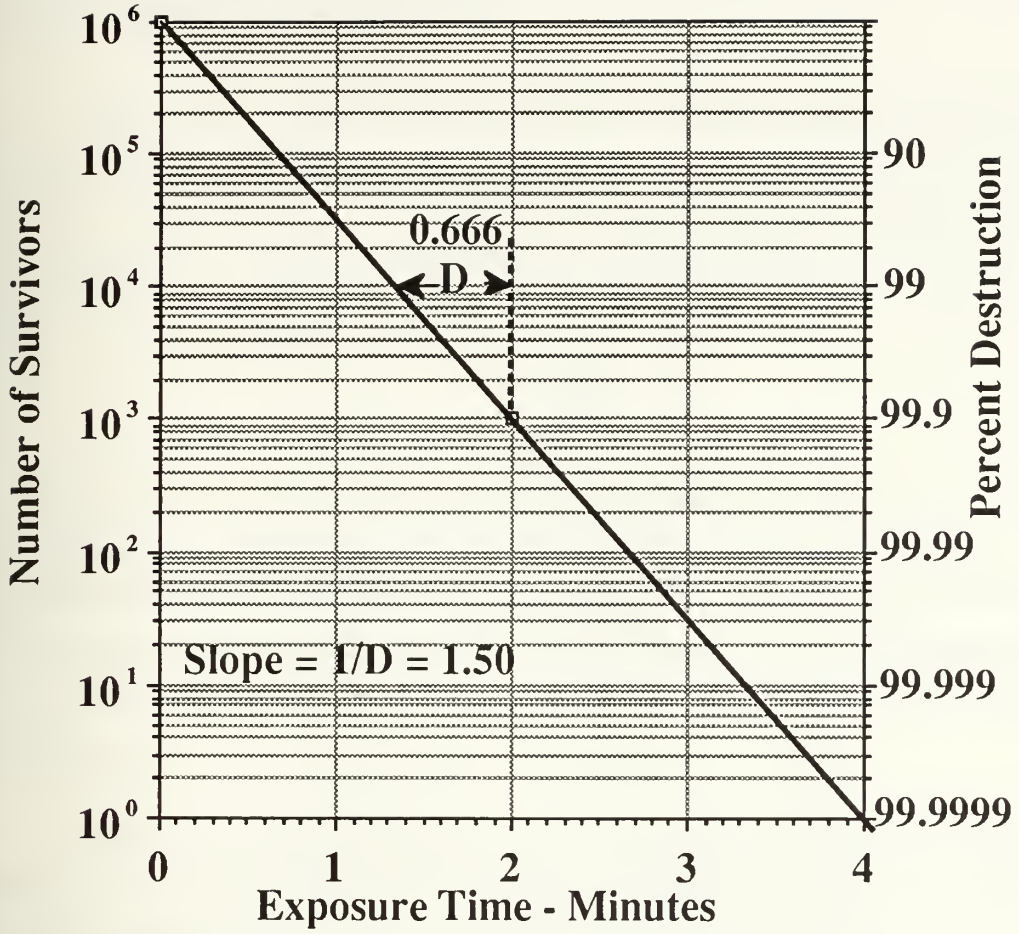

Figure 2-2. Death Survivor Curve at Constant Temperature (Brown, 1971).

The destruction of bacterial populations can be approximated with the following exponential equation for practical sterilization design applications:

$$\log N_t = \log N_o - Kt \quad \text{---------->} \quad K = \frac{1}{t} \cdot \log \frac{N_o}{N_t}$$

Refering to figure 2-2 the following death rate constant K is computed:

$N_o = 10^6$ the initial number of microbes at time zero.
$N_t = 10^3$ number of surviving microbes at time t

$K = (1/2)\log (10^6 - 10^3) = (1/2)(6 - 3) = \underline{1.50}$

This single number K = 1.5, death constant is a direct relationship to the efficiency of the sterilizing agent. Calculation of the death rate constant K allows the microbiologist to compare the heat resistances of different

organisms at the same temperature, or the heat resistance of one particular organism at different temperatures.

Katzin *et al.* (1943) applied the unimolecular reaction rate constant to microbial death under uniform conditions and introduced the principal of the "D" value as the time required at any temperature to destroy 90% of the microorganisms. When the death rate is exponential, D and K represent the slope of the curve and are related through the following:

$$D = \frac{2.303}{K}$$

A subscript is used to designate the temperature employed. Therefore considering the spore producing thermophilic indicator microbe *Bacillus stearothermophilus*, D_{250} is greater than 4 minutes. D_{250} is in the range of 0.10 to 0.20 for the obligate anaerobes Types A and B botulinum and between 0.50 to 1.50 for the resistant spores of putrefactive anaerobes (P.A. 3679) as a comparison.

Table 2-2 demonstrates that in the theoretical case given that 90% of the organisms are killed after each minute of exposure, complete sterilization, in its absolute definition, is never attained. Starting with 10^6 bacteria/ml, at the end of 12 minutes of exposure to the prescribed sterilization temperature theoretically 1 bacterium/10^6 ml or 1 bacterium/1000 liters of suspension would still survive. Therefore for heat sterilization, chemical disinfection, or pasteurization, a greater period of exposure is required for a liquid containing a high concentration of bacteria as compared to a liquid containing only a lower concentration. Sterility tests capable of detecting a single bacteria or virus organism do not exist. Therefore the definition of sterility is based upon the method of test chosen to determine the number of for viable microorganisms.

Table 2-2. Theoretical Example of the Order of Death of a Bacterial Population.

Minute	Bacteria living at Beginning of New Minute	Bacteria killed in One Minute	Bacteria Surviving at End of Minute	Log of Survivors
First	1,000,000	900,000	100,000	5
Second	100,000	90,000	10,000	4
Third	10,000	9,000	1,000	3
Fourth	1,000	900	100	2
Fifth	100	90	10	1
Sixth	10	9	1	0
Seventh	1	0.9	0.1	-1
Eighth	0.1	0.09	0.01	-2
Ninth	0.01	0.009	0.001	-3
Tenth	0.001	0.0009	0.0001	-4
Eleventh	0.0001	0.00009	0.00001	-5
Twelfth	0.00001	0.000009	0.000001	-6

(Source: Perkins, 1969)

Angelotti *et al.* (1961) performed thermal death time studies which indicated that heating perishable foods up to 150º F for at least 12 minutes reduced the *staphylococcus* and *salmonellae* counts from 10^7/gram to nondetectable levels.

Non-exponential thermal death survivor curves were found to be linear in the middle of the plot with the exception of the beginning and the end. An initial lag, concave downward, of the curve could be the result of heat-shock and subsequent activation of the spores. A concave upward tail at the end of the curve could be due to the presence of a heterogeneous population with some heat resistant species present. Another possibility for a concave upward tail could be from the sudden increase in availability of nutrients from the death and lysis of less heat resistant cells (Pflug, 1991).

Rahn (1945) proposed that the death process resembles a first-order biomolecular reaction. His "mechanistic" theory of an exponential decline assumes the denaturation (coagulation) of a single molecule of an essential protein as the cause of death of the cell. Brown (1971) criticizes this theory of a single vital target as being unrealistically crude for a dynamic living cell.

Brown describes thermal death as progressive damage of independent events that bring the cell beyond a point where recovery through specific cell repair mechanisms is no longer possible.

Thermal Destruction of Bacterial Endospores

The most resistant forms of microbial life known to date is bacterial endospores. Any treatment technology with the goal of sterilization or high level disinfection of infectious medical waste must take inactivation of bacterial spores into consideration. Sporulation is the process of endospore formation within the parent vegetative cell of both aerobic and anaerobic bacterial species of *Bacillus, Clostridium, Desulfotomaculum, Sporosarcina,* and *Thermoactinomyces.* One endospore is produced and liberated by lysis of the parent vegetative cell when nutrients become depleted after the exponential phase of growth, or when factors of temperature, pressure, or moisture becomes adverse. The mature endospore that is released enters a period of dormancy or cryptobiosis with no detectable changes or metabolic activity. Some viable endospores from the *Bacillus* species recovered from lake sediments are estimated to be up to 500 years old.

A summary of the detailed description of the sporulation process described by Stanier *et al.* (1986) and Creager *et al.* (1990) is provided at this point in order to gain insight into the mechanics of thermal inactivation for bacterial endospores. Figure 2-3 is a sketch of the vegetative and sporulation cycles of a spore forming bacteria. Endospore formation begins with the replication of DNA that coalesce to form an axial chromatin thread, figure 2-4. The two sets of chromosomes formed move to different locations in the cell, some endospores form near the middle of the cell. Next, most of the parent cell's RNA and some dehydrated protein molecules gather around the DNA to form the core, or living part of the endospore. Unlike normal cell division, with the development of a transverse wall, the membrane of the parent cell completely engulfs this smaller cell called a forespore which is completely within the cytoplasm.

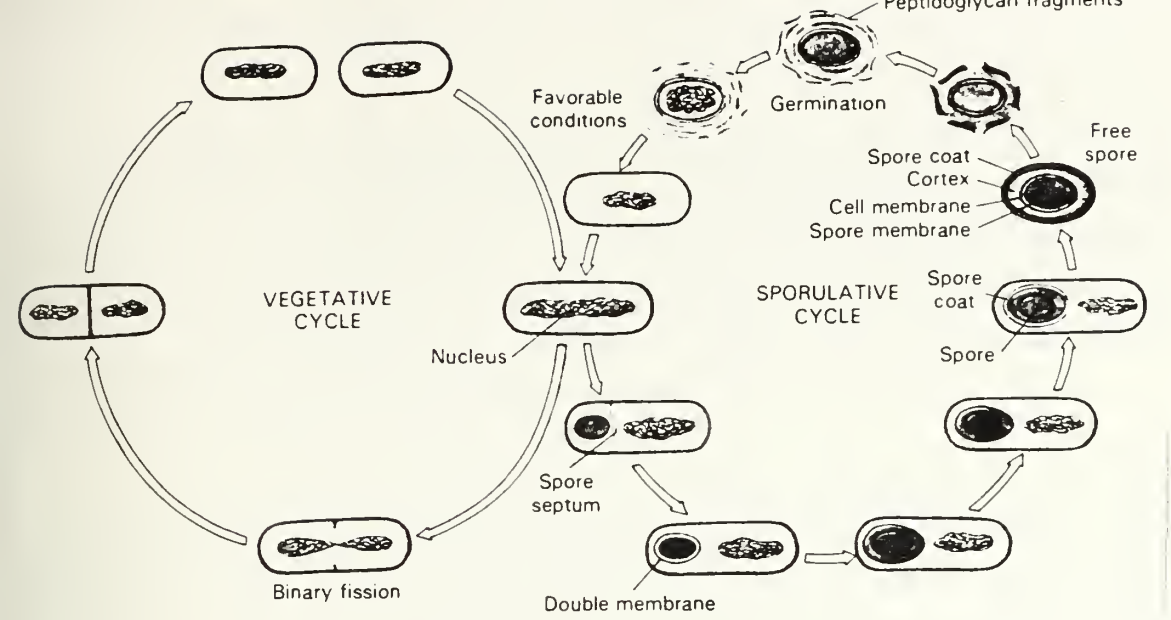

Figure 2-3. Vegetative and Sporulation Cycles in Bacteria (Creager *et al.*, 1990).

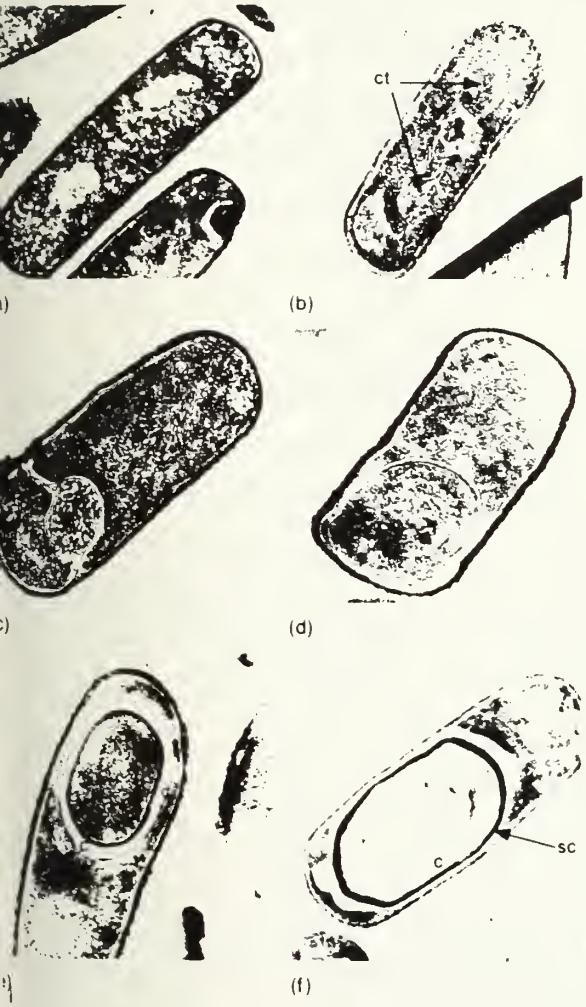

Electron micrographs of thin sections of *Bacillus subtilis*, showing the sequence of structural changes associated with endospore formation. (a) Vegetative cell in course of exponential growth. (b) Condensation of the nuclei to form an axial chromatin thread, ct. (c) Formation of transverse septum (containing a mesosome, m) near one cell pole, delimiting the future spore cell, sc, from the rest of the cell. (d) Formation of a forespore f, completely enclosed by the cytoplasm of the mother cell. (e) The developing spore is surrounded by the cortex, c. (f) The terminal stage of spore development, the mature spore, still enclosed by the mother cell, is now surrounded by both cortex, c, and spore coat, sc. From A. Ryter, "Étude Morphologique de la Sporulation de *Bacillus subtilis*," *Ann. Inst. Pasteur* **108,** 40 (1965).

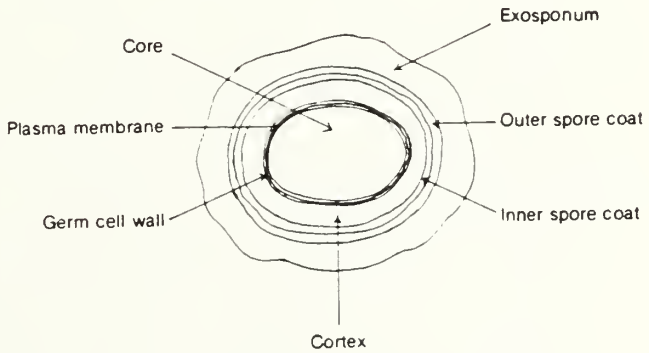

Figure 2-4. Electron Micrographs of Thin Sections of *Bacillus subtilis* (Ann. Inst. Pasteur, 1965)

The forespore is enclosed by its own membrane and the cell wall of the parent cell. At this point, the cycle becomes irreversible and the parent cell is committed to undergo sporulation. Both layers of this membrane synthesize a unique peptidoglycan and release it into the space between the membranes which becomes a laminated layer called the cortex. The cortex protects the spore against osmotic pressure during drying.

Next the parent cell forms a more electron-dense spore coat layer around the cortex which is largely composed of proteins with an usually high content of cysteine and lysine residues. These amino acids are hydrophobic and highly resistant to disinfectant treatments that solubilize most proteins. In the endospores of some species, a loose lipid-protein membrane outer coat called the exosporium is formed. After formation of the spore coat, a massive uptake of Ca(II) ions and synthesis of large amounts of dipicolinic acid occurs within a few hours which contributes to the endospores heat resistance. Upon autolysis of the parent cell, the mature endospore is protected from heat, radiation, and attack by enzymatic or chemical agents during the period of dormancy.

Sporulation is a protective mechanism for these bacterial species and not a form of reproduction. The period of dormancy for a mature spore can be broken by a variety of environmental changes termed activation. Exposure to sublethal temperatures (65° C), low pH, chemical agents, or ageing can enable spores to germinate when placed in a favorable medium. Germination is promoted in a medium that contains certain amino acids (L - alanine), certain ions (Mn^{++}), surfactants (n-dodecylamine), glucose, calcium-dipicolinic acid chelate which penetrates the coat that is damaged during activation. Physical treatment that mechanically subjects the spores to erosion or or cracking will also promote germination. During germination much of the cortex is fragmented and the dipicolinic acid and Ca(II) ions are released, with only the outer coat remaining. Outgrowth of a single vegetative cell occurs if adequate nutrients are available during germination. The newly formed vegetative cell emerges from the spore coat, proteins and RNA that are synthesized, and in about an hour DNA synthesis begins. The newly formed vegetative cell elongates and proceeds to undergo the first vegetative division. The vegetative cycle in spore forming bacteria is

repeated at interval of 20 minutes or more. The sporulation cycle in initiated periodically. Some endospores estimated to be 300 years old have been reported to germinate when placed in a favorable medium. Some species of spore cultures can remain viable after being subjected to 3 hours @ 116º C, where a vegetative form of these sporulating species are inactivated after a few minutes of exposure to 65º C (Stanier *et al.*, 1986; Creager *et al.*, 1990).

During the Fifth International Spore Conference researchers agreed that upon heating or sterilizing spores, the rate of loss of Ca(II) dipicolinic acid complex was related to the thermal inactivation of the spores. Mishiro and Ochi (1966) demonstrated that human serum albumin solution became turbid in the range of 60 - 95º C, but in the presence of 0.05% solutions of dipicolinic acid, turbidity of the solution (heat denaturation of the proteins) was prevented. Less heat-resistant strains of spores lose their dipicolinic acid less quickly than heat-sensitive strains. Halvorson *et al.* (1972) used the analogy of the face of a honeycomb filled with wax to describe the outer coat or exosporium of a spore. The honeycomb structure of the outer coat would be filled with the Ca(II) - dipicolinic acid chelate. Exposing the spore to sublethal heat (60º C) would be analogous to melting the wax from the honeycomb structure. Chemical agent attack would be similar to dissolving the wax. Heat or chemical activation would remove the heat-refractile and diffusion barrier to either allow germination and outgrowth after adsorption and diffusion of nutrients and water, or penetration of high energy levels of heat which would denature the proteins (Joslyn, 1991).

Steam Sterilization

Sterilization by moist heat or steam has been used by health care facilities as a dependable and economical microbe destroying technology since the first autoclave was built by Charles Chamberland in 1880. Saturated steam at 15 psi gauge pressure is used in order to obtain a minimum temperature of 250º F which destroys most resistant forms of microbial life in an efficient amount of time (approximately 12 minutes).

Saturated steam is a water vapor which is at the boiling point temperature of 212º F and at the verge of condensing at standard atmospheric pressure. Heat energy, the vibratory motion of molecules of a substance, normally flows from a hot to cold objects. During the process of steam sterilization, the latent heat energy of vaporization is transferred to the object when the saturated steam is condensed back into the water phase while maintaining a temperature of 212º F (Perkins, 1969). Approximately 86% of the energy stored in saturated steam is accounted for in the latent heat of vaporization. From thermodynamics, the total heat entering a substance is divided between sensible heat and latent heat. Sensible heat is the energy that changes temperature. Latent heat is the energy that produces a change in phase without a temperature change, such as melting, vaporization, or sublimation. For example, given 1 pound-mass of water at 75º F that is converted to saturated steam at 212º F and 15 psi, the following energy balance is estimated:

137 BTU - to bring the temperature from 75º F to 212º F (sensible).
970 BTU - to convert 1 lbm water @ 212º F to steam @ 212º F (latent).
14 BTU - to heat 1 lbm steam @212º F to 250º F @ 15 psi gauge pressure.
1,121 BTU - Total heat energy

Saturated steam than comes in direct contact with a porous article, such as a surgical pack, causes a thin film layer of steam to condense leaving a quantity of moisture in exact proportion to the amount of heat energy absorbed. As subsequent layers of steam come into contact with the porous article they pass through layers previously filled with moisture in turn to condense and heat deeper into the article. This continues until the entire surgical pack is heated and filled with condensate at the constant temperature of the surrounding steam, which is at 250º F (121º C) which is the minimum standard considered safe for sterilization (Perkins, 1969).

The presence of air within the autoclave chamber has the most detrimental effect on the sterilization process. Porous articles that are loaded into an autoclave already have their interstices filled with air at room temperature and atmospheric pressure. If the air is not removed from the chamber it will mix with the saturated steam and reduce the penetrating

power of the steam. Additionally, heat energy will be absorbed by the air in the chamber not allowing it to reach the minimum sterilizing temperature of 250º F within the 12 minute cycle (Perkins, 1969; Josyln, 1991).

A biological indicator is used to determine the effectiveness of the process. *Bacillus Stearothermophilus*, an obligate thermophile with optimal maximum growth rate between 65 - 75º C, is used for the evaluation of moist heat sterilizing processes. *Bacillus stearothermophilus* is the recommended biological indicator for steam sterilization by the United States Pharacopeia. These indicators are available commercially on strips or in ampoules containing a culture medium and indicator that changes color after incubation. Placement of the biological indicator in areas of the load most difficult to heat, at the center where several bags meet, or near the bottom of the load, sometimes in an empty sharps box, or closed petri dish. Inactivation of *Bacillus Stearothermophilus* spores during a sterilization process is used as a safe indication that all other known pathogenic forms of microorganisms will also be inactivated.

Steam sterilization by autoclave has been the preferred treatment method for microbiological diagnostic and research laboratories. This category of infectious waste, mainly consisting of cultures, has been routinely sterilized in a autoclave unit within the same room. This practice minimizes the potential exposure risks of collection, handling, and disposal outside of the laboratory spaces. Additionally, wastes that are known to contain pathogens such as diagnostic cultures and tissues can be sterilized in small table top autoclaves at the doctor's office or in larger mounted units (OTA, 1988). Autoclave units used in the laboratory spaces are generally of the gravity displacement type, as shown in figure 2-5. Air is removed when saturated steam at a density of 0.07 lb/ft^3 forms a stratified layer across the top of the autoclave and displaces air with a density of 0.12 lb/ft. At the interface where the air and steam meet, a constantly renewed supply of saturated steam displaces the air faster than the air can diffuse and mix into the upper layer (Joslyn, 1991).

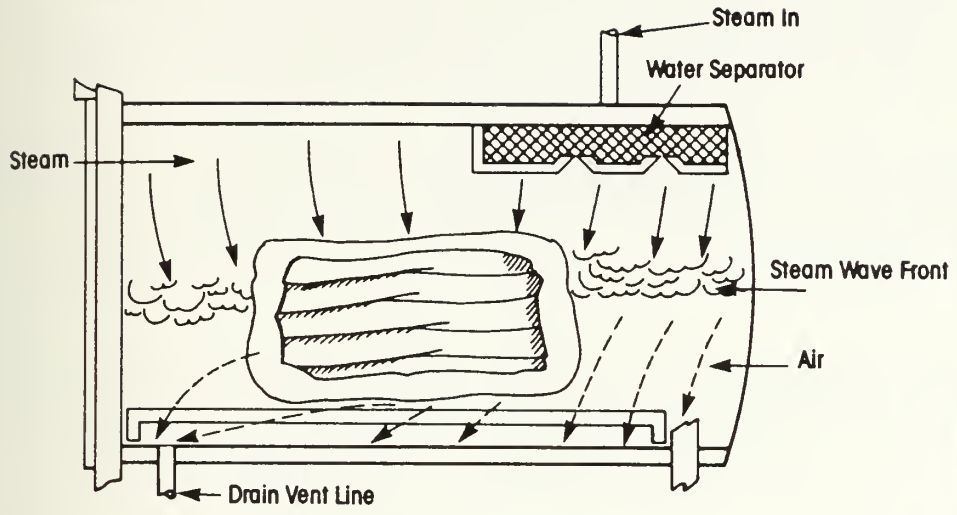

Figure 2-5. Gravity Displacement Steam Sterilizer (Joslyn, 1991).

Table 2-3 lists the recommended minimum standards of time and temperature that are required to be maintained through all portions of the load in direct contact with saturated steam.

Table 2-3. Sterilization Temperature and Time Standards.

°F	°C	Time (minutes)
280	138	0.8
270	132	2
257	125	8
250	121	12
245	118	18
240	116	20

(Source: Perkins, 1969)

The critical treatment parameters for steam sterilization are time, temperature, and direct steam contact with the waste. Potential problems and interferences with steam sterilization by autoclave are summarized from Reinhardt and Gordon (1991):

Waste Heating Interferences

- Excessive mass of the load will require more heat and a longer exposure time. Rutala *et al.* (1982) recommended using an oversized tray with a low lip to facilitate drainage and removal of air.

- Waste loads of the same mass may still differ in the amount of heat needed because of the variation of the heat capacity of the various articles.

- Articles within the waste with low heat conductivity (low molecular impact or agitation), such as plastics, cloth, paper, and animal bedding will take longer to reach sterilization temperatures.

- Wastes that have a small ratio of surface area to volume reach sterilization temperatures slower.

Direct Steam Interference

- Inefficient chamber air removal from prevacuum or pulse techniques will retard the penetrating power of steam by developing pockets of cooler dry air.

- Some of the infectious waste bags are advertised as being autoclavable but are practically impermeable to steam. As demonstrated by Rutala *et al.* (1982) the techniques to improve steam penetration would include: to loosely tie or punch holes in the top of the bag, or roll down the sides of the bag over a rigid container. The trade off to improved steam penetration is an increased risk of waste exposure to the handler.

- Inappropriate waste articles such as oils and greases that repel water and do not allow direct contact between microbes and saturated steam. Large animal carcasses that do not allow complete steam penetration.

Possible solutions to some of these operational problems are summarized as follows:

- Use of a meltable polyethylene bag inside a stronger heat stable bag. Before sterilization, the outer bag could be rolled down. During the cycle, this bag will melt providing direct steam contact. Any waste that should happen to leak would be contained in the second bag.

- Lengthening the duration of the pre-vacuum cycle or increasing the number of vacuum cycles.

- Extending the duration of the exposure period. For example, the routine practice when sterilizing hospital supplies is to use twice the spore kill time; (Table 2-4).

Table 2-4. Standard Sterilization Times for Hospital Supplies.

Temperature		Spore Kill Time
ºF	ºC	
240	116	30
245	118	18
250	121	12
257	125	8
270	132	2
280	138	0.2

(Source: John Hopkins University, Public Health, 1981)

Considering the differences in the characteristics of the bags from manufacturer to manufacturer, and inherent differences from sterilizer to sterilizer, it is recommended to test each containment system individually before setting a standard operating procedure. Meeting the competing factors of waste handler protection and containment of waste, a steam penetration permeability of 3g/100 in^2 appears to be adequate (Perkins, 1969). Some of the bags are constructed with elastomeric closures to provide a pathway for steam to penetrate the bag.

Under ideal conditions with the waste being subjected to direct steam contact, the exposure time of 270º F would be 2 minutes. One health care institution conducted individual test runs with sharps containers they recently purchased and decided to change their operating procedure to a lengthened prevacuum from 3 to 6 minutes and exposure time of 45 minutes at 270º F (Reinhardt and Gordon, 1991).

In theory, if moisture is present in a closed container, such as a petri dish, within a 1.5 mil infectious waste bag, steam can be generated within that dish if the entire load is heated up to a sufficient temperature. Two studies published in 1982 investigated factors affecting the efficiency of gravity displacement autoclaves evaluating the parameters of water addition, volume of waste, and types of container to hold the waste bags. Rutala *et al.* (1982) used contaminated 1.5 mil polyethylene 100 mm petri dishes from a hospital microbiology lab in standardized loads weighing 5, 10, and 15 lb. Placing a thermocouple at various heights in the center of a 10 lb load, the most difficult to heat spot was approximately 5.5 cm from the bottom of the front of three bags loaded in the autoclave. In each case, four holes were punched in the top of each of the bags. This location was monitored for time-temperature profiles using digital potentiometer inside one of the old petri dishes. Figure 2-6 is a copy of the test results experiments A through D conducted.

In each of the experiments A through C the top of the autoclave bag was loosely constricted with a twist tie and four holes were punched in top before placing the bags in either the polypropylene or stainless steel container. Heat-up time is defined as the time required for the steam to penetrate the load and reach the selected temperature of the chamber.

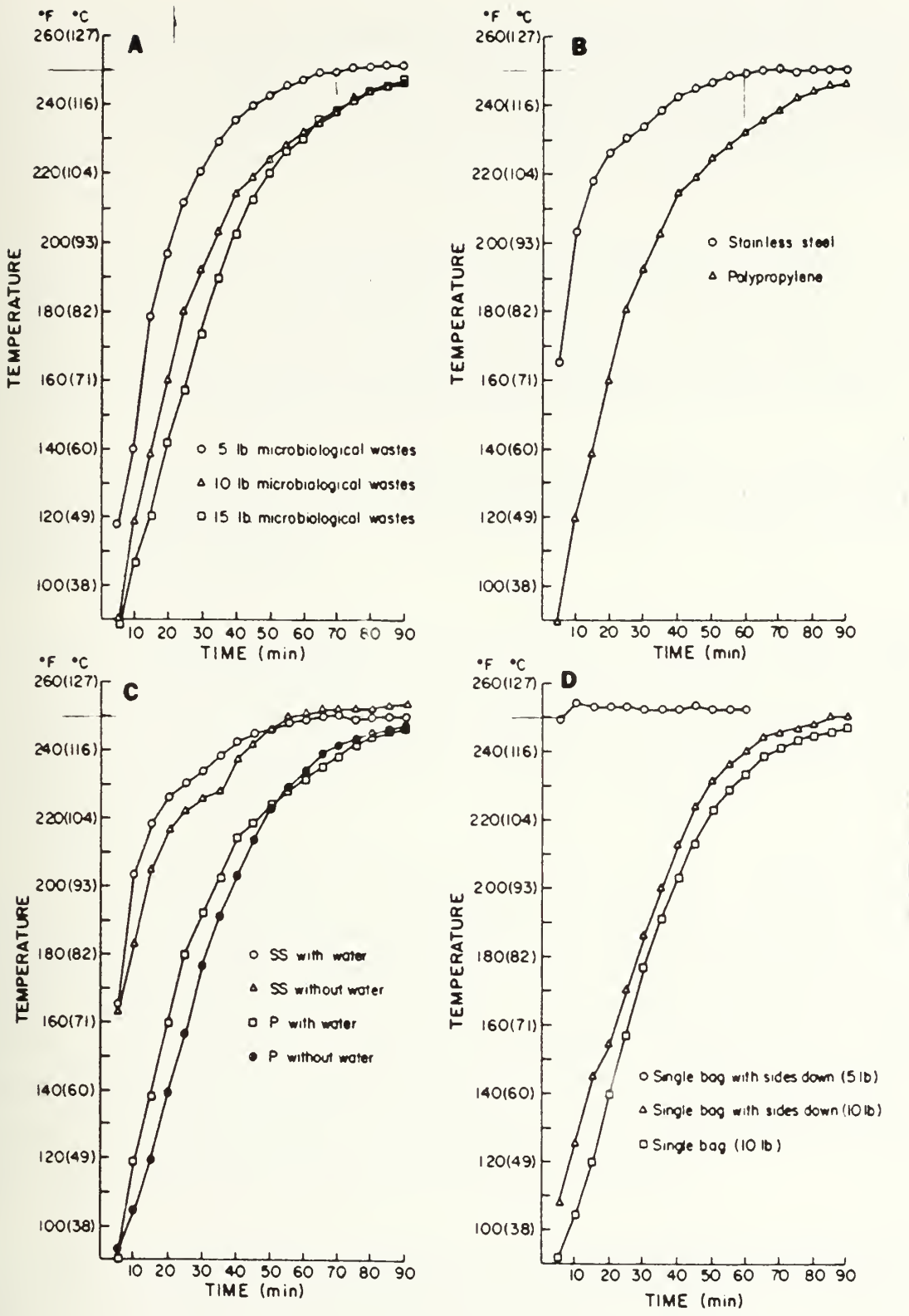

Figure 2-6. Time-temperature Curves for Conditions that Affect Steam Sterilization of Microbiological Waste.

A - Increasing the mass of the load requires longer times necessary for heat up of the waste. Both the 10 and 15-lb loads, consisting of approximately 136 and 205 petri dishes each, did not attain the minimum sterilizing temperature of 250º F as did the smaller 5-lb load with approximately 67 petri dishes.

B - When using a stainless steel container to hold a standard 10-lb load, the waste attained the desired sterilizing temperature of 250º F (121º C) in 60 minutes. The same 10-lb load placed in a polypropylene container did not reach 250º F even after 90 minutes of the autoclave warm up cycle.

C - Heat-up time was not significantly increased when 500 ml of water was added to the standard 10-lb load using either a stainless steel or polypropylene container.

D - Using a polypropylene container and a 5 lb load with the sides rolled down resulted in attainment of 250º F as soon as the autoclave unit heated up to 250º F after 2 minutes. Rolling down the sides of a 10-lb load in a polypropylene container without water required a heat-up time of 90 minutes.

Bacillus Stearothermophilus biological indicators, with a manufactured kill time of 15 minutes at 250º F, were placed at 5.5 cm from the bottom of the bag. Rutala *et al.* (1982) concluded that inactivation of the indicator, or complete sterilization, occurred when 10 or 15 pound loads were placed in stainless steel containers for a period of 90 minutes. Vegetative and other spore forming bacteria were destroyed with a 45 minute sterilizing cycle for 10 or 15-lb loads with or without the addition of water in steel containers, but water was necessary when using polypropylene containers.

Lauer *et al.* (1982), also reported that the most difficult to heat location in the waste occurred approximately 5 cm from the bottom of the stainless steel or polypropylene container. Experiments during this study used 4 and 8 pound standardized loads of contaminated petri dishes in a 3 mil autoclave bag. Stainless steel containers were also found to significantly increase the heat-up time compared to polypropylene containers. Table 2-5 shows

temperatures at specific times during the sterilization cycle using different containers to hold standard 4 lb waste loads. In the experiments conducted the top of the bags were not loosened and holes were not punched through the bag.

Table 2-5. Temperatures Reached Using Different Waste Containers.

Container type for 3 mil autoclave bag	Temp reached w/time ºC (standard deviation)		
	12 min	30 min	50 min
Stainless Steel w/ 1 liter water	98 (3.0)	115 (1.2)	121 (0.6)
Stainless Steel w/ no water	37 (7.2)	71 (14.8)	105 (5.0)
Polypropylene w/ 1 liter water	48 (14.5)	77 (12.6)	99 (4.3)
Polypropylene w/ no water	44 (8.3)	70 (8.9)	92 (3.7)

(Source: Lauer *et al.* 1982)

Lauer *et al.* (1982) justified his results explaining that stainless steel containers have a thermal conductivity 100 to 500 times than that of polypropylene, and the thermal conductivity of water is 20 to 30 times greater than air. This study recommends processing microbiological waste in autoclave bags with 1 liter of water placed in a stainless steel container for a period of 50 minutes. Without water added to the waste a sterilization cycle greater than 50 minutes would be required. Lauer *et al.* (1982) is of the opinion that a temperature of 239º F (115º C) for a cycle of 20 minutes is sufficient to decontaminate infectious waste prior to disposal in a landfill. Rutala *et al.* (1982) also concluded that an autoclave cycle time could be implemented that would be less than the time required to inactivate *Bacillus Stearothermophilus* indicator spores (250º F for 90 minutes) but long enough to provide consistent inactivation of vegetative and less resistant pathogenic spore forming bacteria.

When establishing a standard operating procedure for treatment by steam sterilization, health care institutions should first conduct a survey of the types of infectious waste generated. Upon completion of the survey sterilization cycle times should be based on the worst case combination of bags of different heat capacities from different stations of the facility. A separate

cycle for sharps containers is also recommended (Reinhardt and Gordon, 1991). Most institutions use a biological indicator at least once a month or whenever the standard operating procedures change.

EPA (1986) recommends that infectious waste that is also radioactive should not be steam sterilized because of the potential for exposure to the waste handlers. Two studies conducted after the EPA recommendation have successfully inactivated infectious radioactive waste on site in a laboratory gravity displacement autoclave. CDC guidelines (1986) require all lab equipment used and wastes generated during HIV research needs to be sterilized either by autoclave or incineration. But incineration of radioactive infectious waste is routinely beyond the limits of on site permit authority for health care institutions. Commercial incineration is only available for liquid scintillation cocktail and not solid radioactive infectious waste.

Stinson *et al.* (1990) studied typical research laboratory waste consisting of absorbent plastic backed bench paper, gloves, pipette tips, and eppendorf tubes contaminated with six radionuclides: ^{14}C, ^{35}S, ^{32}P, ^{125}I, ^{3}H, and ^{51}Cr. *Bacillus pumilus* spore strips and vials of *vaccina* virus in medium were used as a substitute for HIV since these microorganisms were more heat resistant and less hazardous to work with. During the experiment, the radioactive infectious waste was placed in a 1.5-mil transparent polypropylene autoclave bag with 300g of absorbent to produce a dry waste and 2 ml of water which acted as a heat sink during sterilization. Temperature sensitive physical/chemical indicators were taped to the outside of the primary bag and then placed in a second 1.5-mil transparent polypropylene bag. A charcoal filtration drying tube (19-mm diameter) containing 5 g of activated charcoal was secured to the opening of the double bagged waste with autoclave tape. The purpose of the filter is to allow penetration and equalization of saturated steam while capturing any volatilized radioactive contaminants. An exposure temperature of 250º F for 30 minutes was necessary to change the colors of the physical/chemical indicators. Both the *Bacillus pumilus* spore strips and the *vaccina* virus were inactivated in the waste after the exposure at this temperature and time. The charcoal filter contained volatile radioactive compounds of $^{35}SO_2$ and $^{3}H_2O$ generated during the steam sterilization cycle. Wipe tests and air samples analyses through a rubber tube secured to the

outer tip of the charcoal filtration device indicated that less than 25 disintegrations per minute/100cm^2, the minimum dose allowable, was released from the bag.

Although a one-log reduction D-value @ 121º C for HIV has not been experimentally determined, Stinson *et al.* (1990) previously reported thermal death times for HIV at 56 and 60º C and calculated a range of $D_{121º\ C}$ values between 4.2 X 10^{-9} and 2.9 X 10^{-7} minutes. Since HIV is a fragile microorganism, which is easily inactivated by heat, the double bagged, charcoal filtration system proposed in the study thermally inactivates *Bacillus pumilus* spores with a $D_{121º\ C}$ value of 0.15 minutes which is approximately four orders of magnitude more heat than is required to inactivate HIV. Considering this calculated factor of safety, then the physical/chemical indictors taped to the outside of the primary bag can be used as a visual method to confirm sterilization of the waste without taking the risk of opening up the bag in order to retrieve a biological indicator. Secondary treatment of the radioactivity characteristic may be accomplished by allowing the waste to decay while in storage until it is reduced to background levels for short half-lifes (hours or days) wastes. Wastes with longer half-lifes (months or years) would still be required to be sent to off at low-level radioactive disposal sites.

In another study, Stinson *et al.* (1991) repeated the same experiment using the conventional steam sterilization biological indicator, *Bacillus stearothermophilus*. Earlier experiments using these spore strips in waste bags indicated survival after 121º C and 60 minutes exposure using water as the solution. Stinson *et al.* (1991) demonstrated that the use of 50 ml of hydrogen peroxide solution to the double bagged charcoal filtered system inactivated 100% of the spore strips after a 121º C and 60 minutes exposure cycle. The absorbant was still required to be added in order to produce a solid waste for final disposal at the radioactive waste site. During the experiments it was shown that 150 g of the absorbent was more than adequate to absorb 50 ml of added liquid plus any additional moisture from the waste or steam entering the bag through the charcoal filter. Stinson *et al.* (1991) concluded that the decomposition of hydrogen peroxide to water and oxygen is an exothermic reaction

$$2H_2O_2 \text{ ---------> } 2H_2O + O_2$$

which releases 2.8 kcal of heat to the inner bag. When this heat is distributed throughout the waste the temperature is raised by approximately 10º C, enough to significantly reduce the required steam processing time.

One of the important parameters for sterilization in gravity displacement autoclaves is the arrangement of the load. Some of the the loading recommendations developed by Perkins (1969) for sterilization of surgical packs can be applied to some infectious waste loads. Arrangement of linens and towels in a vertical manner allows steam vapor to pass through the spaces between the layers instead of perpendicular through the middle of the fabric. This can be applied to the arrangement of a load of sharps containers.

In 1978, health care facilities in California were faced with the decision to upgrade existing on site medical waste incinerators in order to meet new state air quality standards. This action encouraged the investment and development of the first commercially available medical waste steam sterilizer. A group of San Joaquin Valley hospitals approached a farm equipment repair company to combine the techniques of a steam sterilizer and solid waste garbage compactor into one unit. The first "San-i-Pak" high vacuum sterilizer/compactor was installed at the Tracey, California community hospital in 1978 and now well over 100 units are in operation nationwide (San-i-Pak, 1992).

The operating sequence for a San-i-Pak unit, figure 2-7, starts with the air in the autoclave chamber being mixed with 307º F steam in order to instantaneously kill any airborne microbes from the previous load. Bags or sharps containers are then loaded and the door is sealed. As a high pressure, pre-vacuum autoclave unit all of the chamber air is removed from chamber with a negative 38 psig vacuum and simultaneously saturated steam is injected which undergoes considerable expansion immediately filling the spaces surrounding the load and rapidly diffuses through the load. After a temperature of 270º F is attained, a 30 minute timer is automatically activated and the chamber reaches an ultimate temperature of 281º F during the cycle.

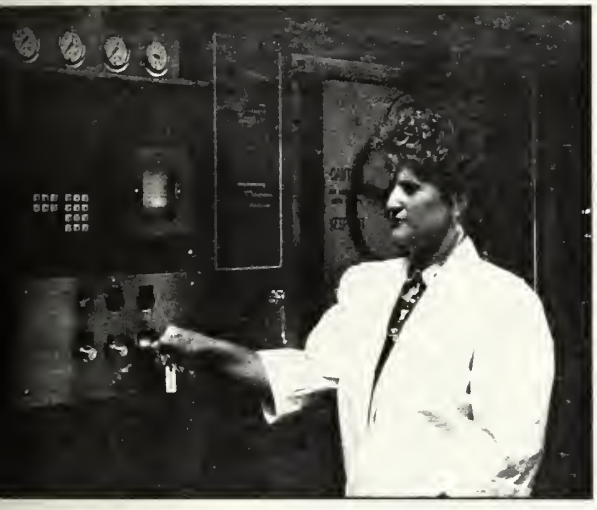

Infectious Waste
Prior to Treatment

Sterile Waste
After Treatment

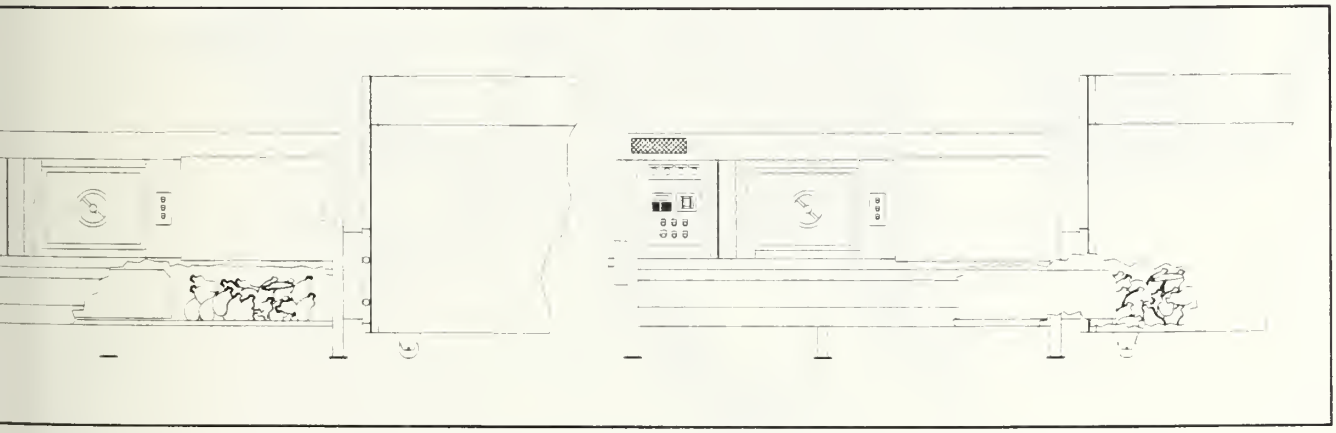

Figure 2-7. San-i-pak High Vacuum Sterilizer/Compactor, San-i-pak Inc 1992.

The complete cycle time, including loading, is typically 68 minutes. After completion of the cycle the load of sterilized waste bags can be automatically dropped down in front of a ram which compacts the waste into a leak proof roll-off refuse container with up to a 6 to 1 reduction in volume .

Figure 2-8 shows a retort steam sterilization unit which does not have a steam jacket as the gravity displacement autoclaves. Therefore, additional heat energy is required from the steam source to enable the walls of the pressure chamber to reach the desired sterilization temperature. The manufacturer of this unit recommends a temperature of 270° F at 30 psi rather than 15 psi in order to overcome the dry heat sterilization effect that occurs within the closed containers in the waste.

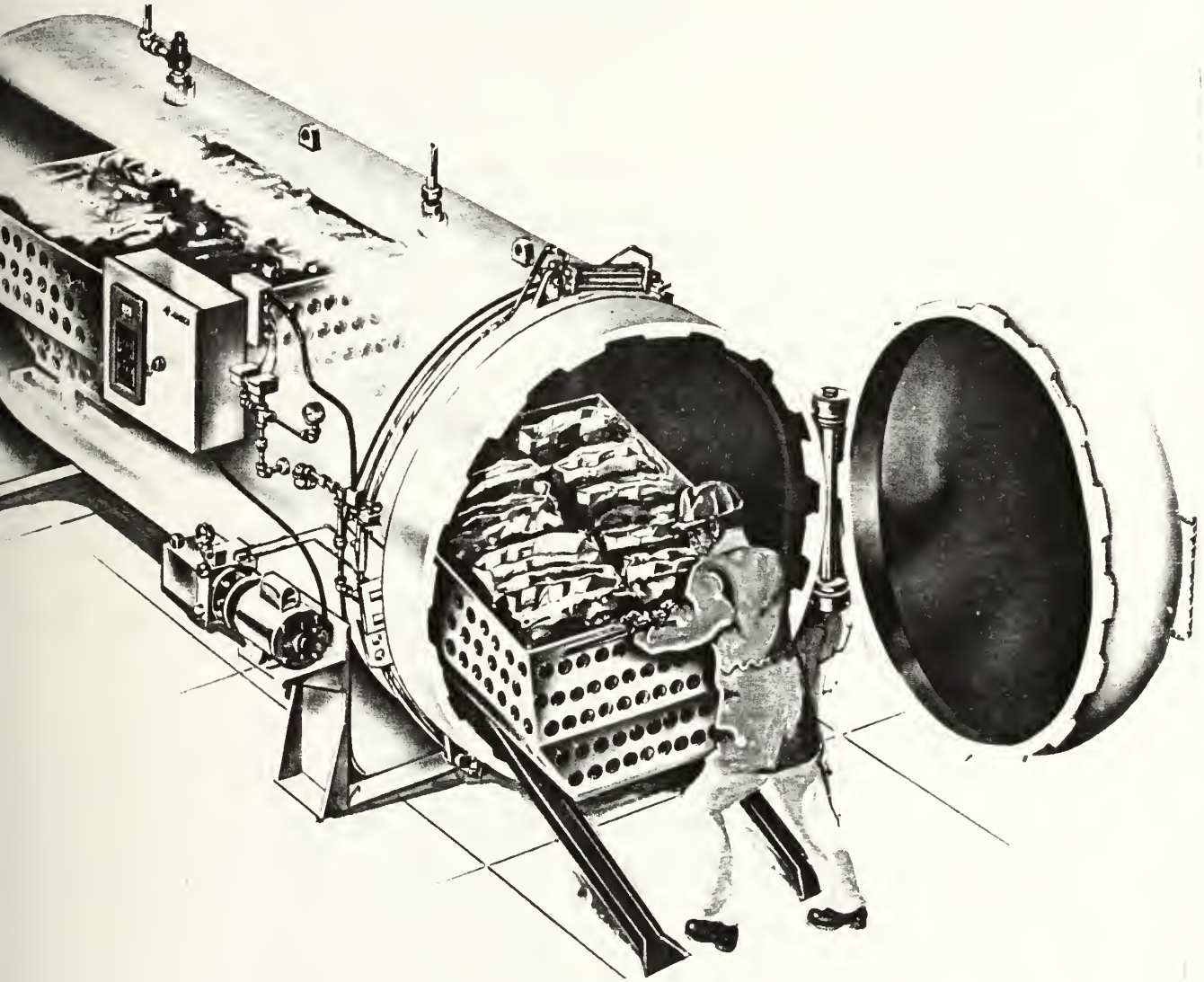

Figure 2-8. Retort Autoclave, AMSCO Eagleguard Model LV, 1992.

Mechanical/Chemical Disinfection

Disinfectants are used to destroy pathogenic microbes on inanimate materials but not necessarily *Tubercle bacilli, Enteroviruses, Hepatitis viruses,* or bacterial spores. In the field of chemical disinfection, hypochlorites are the oldest and most widely used of the active chlorine compounds (Lesser, 1949). Summarizing advantageous characteristics, hypochlorites prove to be:

- Powerful germicides controlling a wide spectrum of microorganisms, viruses, non-acid fast vegetative bacteria, fungi, algae, protozoa, and some bacterial spores.
- Deodorizers both during and after application.
- Non-toxic, colorless, and nonstaining at specified concentrations.
- Easy to handle and economical to use.

Sodium hypochlorite (NaOCl) solutions range in applied concentration from 1 to 15%; domestic use of this solution (Chlorox) is at 5.25%. NaOCl is an effective method of supplying chlorine for disinfection of the waste. Haas (1990) points out that from the following reaction, 1 mole of hypochlorite is electrochemically equivalent to 1 mole of Cl_2, elemental chlorine at molecular weight of 70.9 g/mol.

$$OCl^- + 2e^- + 2H^+ \text{ <---> } Cl^- + H_2O$$

Therefore a pure solution of NaOCl would contain:

$$\frac{70.91 \text{ g/mol of free available Cl per mole of } OCl^-}{74.44 \text{ g/mol of NaOCl}} = 95.3\% \text{ available Cl by wt}$$

Free available chlorine equals the sum of the concentrations of molecular chlorine (Cl_2), hypochlorus acid (HOCl), and hypochlorite ion (OCl^-). In the presence of ammonium ions (NH_4^+), free chlorine reacts in a stepwise manner to form monochloramine (NH_2Cl), dichloramine ($NHCl_2$), and tricloramine (NCl_3).

$$NH_4^+ + HOCl \text{ <---> } NH_2Cl + H_2O + H^+$$

$$NH_2Cl + HOCl \leftrightarrow NHCl_2 + H_2O$$

$$NHCl_2 + HOCl \leftrightarrow NCl_3 + H_2O$$

These compounds when added to the available chlorine compounds make up the total residual chlorine.

NaOCl solutions are unstable and liberate chlorine gas under acidic conditions, therefore liquid solutions are best kept on the alkaline side of neutrality. Using high levels of available chlorine (1,000 to 5,000 ppm) in NaOCl solutions, they have been found to be capable of penetrating organic wastes such as bodily discharges and dead tissue (Trueman, 1971). Straddling (1953) demonstrated that a 1% NaOCl solution (10,000 ppm) quickly dissolved repeated doses of infectious tuberculous sputum even after 12 hours of contact with the initial dose. Broth cultures of *Staphylococcus saprophyticus* that were completely covered with a standard food soiling medium consisting of 14% nutrient broth powder, 9% milk powder, 9% rice starch, and 7% vegetable fat, were destroyed after 1 hour contact with a 1,300 ppm NaOCl solution (Trueman, 1971).

Various microbial mechanisms of disinfection by free available chlorine have been theorized by many researchers but never demonstrated experimentally. Friberg (1956) quantitatively studied chlorine uptake in bacteria using radioactive ^{35}Cl. Chlorine uptake in bacteria was found to increase with increasing exposure time and increasing chlorine concentration. Friberg (1956) concluded that the previous theory promoted by Baker (1926) of cell metabolism interference by the formation of chlorine-protein (n-chloro) compounds was probably not the initial bactericidial mechanism. Instead first contact oxidation reactions of the chlorine with the bacterial cells led to an irreversible inhibition of the sulfhydryl enzyme groups and essential cytoplasmic metabolic reactions. These conclusions were further supported by previous studies by Knox *et al.* (1948) and Green *et al.* (1946) both postulating that the oxidative action of chlorine produced irreversible inhibition of the sulfhydryl enzyme groups and subsequent destruction of the cell. In 1957, Friberg demonstrated that minute amounts of chlorine resulted in a change in the permeability of the bacterial cell wall

which was quantified by leakage of nucleoproteins which were radiolabeled with phosphorus (^{32}P).

Jette and Lapierre (1992) evaluated whether a mechanical/chemical infectious waste disposal system, the intermediate sized Z-5000 HC manufactureed by Medical Safe Tec Inc., effectively treated waste at a rate of 90 Kg to 180 Kg as advertised. The effectiveness of the unit was based on the recommended inactivation factor greater or equal to 5 $\log_{10}$ calculated by the Hospital Infection Society (1983) as follows:

$$\frac{X^0}{X} = \text{Inactivation Factor}$$

X^0 = Average microbial concentration in the load corrected for dilution in the apparatus tested.

X = Microbial concentration recovered.

An inactivation factor greater than 5 $\log_{10}$ is considered to be an effective disinfection process. Figure 2-9 shows the operation schematic for the system. First the infectious waste, contained in bags is placed in a feed hopper, then pushed down through a chute to a pre-shredder and ultra high speed hammer mill where the waste is shredded, macerated, and simultaneously drenched with a recommended 4000 ppm sodium hypochlorite solution. This step in the process results in a forced reaction which volatilizes the waste material and exposes the pathogens to the chemical disinfectant in a controlled environment. The treated waste falls through a chute onto a conveyor belt where the solids are separated from the free liquid and dumped into a cart. Liquids from this process are discharged to the sanitary sewer. Solids remaining on the conveyor are then transported into a cart for final contact time with the sodium hypochlorite disinfectant solution. Remaining liquid in the cart is gravity drained into the sewer. The final remaining solid material thus becomes categorized as non-regulated, non-recognizable waste for final disposal in a landfill. The bulk volume reduction of the final product is 8:1 (OTA, 1990; Medical Safe Tec Inc., 1992).

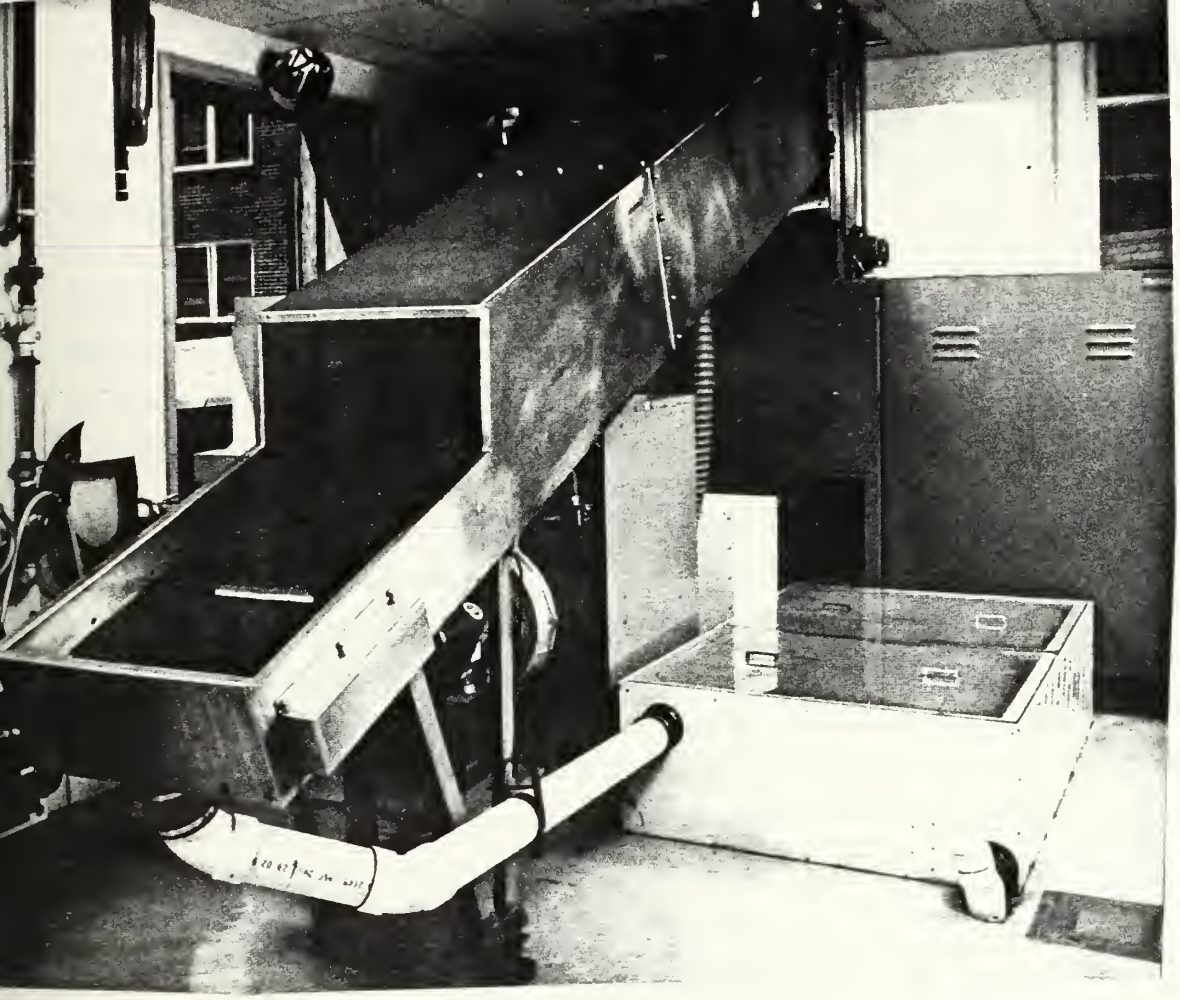

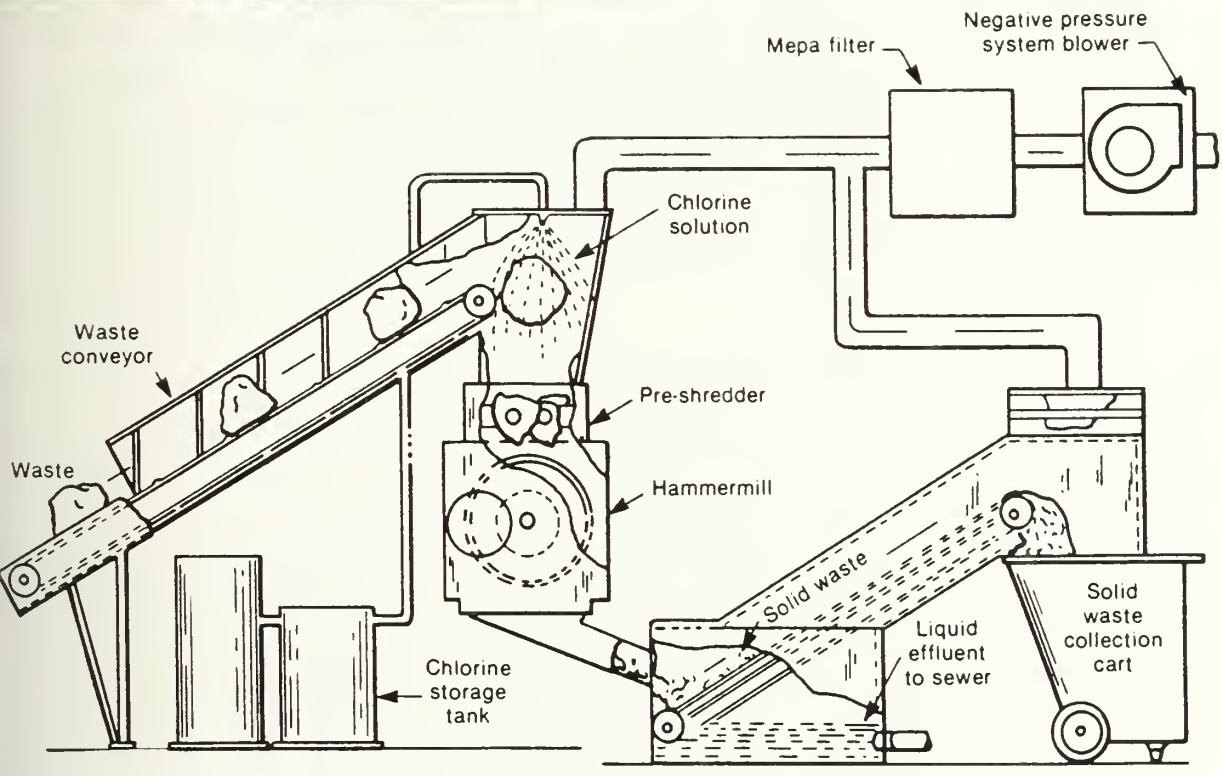

Figure 2-9. Mechanical/Chemical Disinfection Unit Medical Safe TEC, 1992

Jette and Lapierre (1992) challenged the system with a standard 40 lb load consisting of the following:

- 16 X 125 mm test tubes containing 10 ml of broth each, 100 total.
- 250 ml bottles containing 100 ml of broth each, 20 total.
- 15 X 200 mm covered agar plates containing 20 ml of medium, 200 total.
- 1 liter bottles of animal blood, 4 total.

Each of the experiments were performed in triplicate using one of the following microorganisms to inoculate both the broth and agar: *Bacillus subtilis var. niger, Candida albicans, Enterococcus feacalis, Mycobacterium fortuitum, Serratia marescens,* and bacteriophages 0X174 and f2. As recommended by the manufacturer, each of the individual waste loads was processed for a complete cycle time of 6 minutes at a flow rate of 18.9 liter per minute using a concentration of 4000 ppm sodium hypochlorite disinfectant solution. This flow rate and concentration was required to ensure adequate disinfectant levels in the settling tanks to handle the high protein loading. Inactivation factors greater than 5 $\log_{10}$ were achieved for the majority of the microorganisms with the exception of settling tanks and cart samples for *Mycobacterium fortuitum* and bacteriophage f2. Additional runs were made reducing the protein content of the load by replacing the 4 liters of animal blood with 4 liters of water which resulted in achievement of the 5 $\log_{10}$ inactivation factor for *Mycobacterium fortuitum* and bacteriophage f2. Table 2-6 show the mean concentration of the chemical by-products released by the treatment process.

Table 2-6. Mean Conc of Chemical By-products from Medical Safe TEC process

Chemical By-Products	Load with Blood	Load without Blood
Free residual chlorine	17.0	2,612.00
Chloramines	660.0	144.00
Total residual chlorine	677.0	2,756.00
Trihalomethanes	15.0	0.16
pH	7.4	9.70

(Source: Jette and Lapierre, 1992)

As expected, the amount of free residual chlorine in the liquid effluent in inversely proportional to the protein content. Chloramine and trihalomethane concentrations were found to be directly proportional to the amount of original organic matter introduced to the system. In order to ensure adequate disinfection of the actual waste loads that may contain similar levels of protein content, Jette and Lapierre (1992) concluded that the concentration and flow rate of the sodium hypochlorite solution needs to remain high, at least 4000 ppm, so that free residual chlorine is detectable in the effluent. Increasing the concentration of NaOCl disinfectant could provide a consistent level of disinfection, but the disadvantage is the possibility of exceeding either the facilities sewage discharge permit or permissible exposure levels for the chemical disinfectant in the workplace environment.

Another problem area was observed when challenging the negative air device of the system. *Serratia marescens* were found in the air samples taken outside of the unit next to the conveyor belt when the system was tested using tap water instead of NaOCl disinfectant. *Serratia marescens spp.* was not detected by air sampling the same location after the 4000 ppm concentration of NaOCl was turned back on. Jette and Lapierre (1992) pointed out, that fugitive microbial aerosols escaping the system should be a matter of concern for facility infection control practitioners. Especially in light of the experimental findings that the desired level of disinfection, greater than 5 $\log_{10}$ inactivation factor for *Mycobacterium fortuitum* and bacteriophage f2 was never achieved for high protein content loads. Technical reports provided by the manufacturer do not address any of the problems encountered during these experiments.

Manufacturer funded research by French and Eitzen (1984) from the Indiana University Department of Hospital Infection Control, evaluated one of the first intermediate sized Medical Safe TEC models. These researchers challenged the system with approximately 80 lbs of organic material consisting of approximately 1000 plastic agar plates cultured with *Staphylococcus aureus, E. coli, Pseudomonas aeruginosa, Bacillus subtilis, Clostridium sporogenes* and *Seratia marcescens,*. This evaluation concluded that all vegetative microorganisms were inactivated after a 5 minute cycle and that

all spore forming bacteria were inactivated after 2 hours when the treated waste was prevented from draining and allowed to remain in contact with residual NaOCl in the solid waste containment cart. Air sampling conducted with agar settling plates did not indicate the presence of any *Seratia marcescens*.

Denys (1989), director of Microbiology and Immunology, Methodist Hospital of Indiana, evaluated the inactivation efficiency of the largest Medical Safe TEC unit advertised to process 800 to 1200 lbs of infectious waste per hour. The system was challenged with test runs of a standard 52 lb load consisting of contaminated agar plates, broth cultures, sharps, non-wovens, blood tubes, and blood bags which were seeded with 1 liter of a particular bacterial species of *Bacillus subtilis, Enterococcus feacalis, Mycobacterium fortuitum,* or *Seratia marcescens*. In addition heavily streaked agar plates of *Acinetobacter anitarus, Aspergillus sp., Candida albicans, Salmonella sp., Staphylococcus aureus,* and *Pseudomonas aeruginosa* were randomly included in the standard test loads. The study concluded that all vegetative microbes were inactivated after a 5 minute process time with NaOCl concentration of 1,500 ppm. *Bacillus subtilis* spores were inactivated greater than 5 $\log_{10}$ after 2 hours of exposure to 4,000 ppm concentration. No aerosols or gram negative *Seratia marcescens* were identified outside of the unit when the system was operated with pure tap water without NaOCl. But, Denys (1989) did report that an average of 6 - 8 colonies of *Seratia marcescens* were recovered on agar settle plates inside the unit prior to the HEPA filter cabinet.

Denys and Street (1991) continued an evaluation of the Medical Safe TEC Model Z-12,500 with inactivation studies of human pathogenic viruses. Using a standard test load of infectious waste seeded with 1 liter of *Escherichia coli* phag phi 174 at a concentration of 2×10^{10} bacteriophage/ml, the experiment achieved greater than 5 $\log_{10}$ inactivation factor after a 30 minute exposure to free available chlorine concentrations of 500 ppm in both the solid and liquid waste streams.

Microwave Disinfection

Disinfection of infectious waste by microwaves is essentially a steam sterilization process as reported by the Research Triangle Institute (1989). In a comparative study of the bactericidal effects of thermal and radio frequency energy, Goldblith and Wang (1967), demonstrated that the inactivation of *Escherichia coli* and *Bacillus subtilis* exposed to microwave energy of 2,450 M Hz was solely due to heat alone and there was no apparent effect from the microwaves. Experiments were performed using different amounts of ice added to the *E. coli* suspension in order to obtain longer exposure time in the Radarange microwave field while maintaining a lower overall temperature. Table 2-7 show the results of inactivation of *Escherichia coli* by microwaves. This experiment reinforces the conclusion that E. coli inactivation by microwaves is due solely to the thermal effect.

Table 2-7. Inactivation of *Escherichia coli* by Microwaves with Ice Added to the Bacterial Suspension.

Time in Radarange Microwave (sec)	Volume of *E. coli* suspension (ml)	Weight of ice added (gram)	Final Temp of suspension (°C)	Bacterial count (no./ml)	
				Before Exposure	After Exposure
50	9.1	20	20	3.9×10^8	4.1×10^8
70	9.1	35	29	2.6×10^8	2.0×10^8
100	9.1	40	51.5	2.2×10^8	2.5×10^8

(Source: Goldblith and Wang, 1967)

Vela and Wu (1979) demonstrated that the lethal effect of 2,450-MHz radiation on microorganisms was solely attributable to thermal effects in the presence of water. A variety of microorganisms were subjected to direct microwave radiation in both a dry and wet states. Colony counts of *Azotobacter* that survived irradiation in both dry and wet soil conditions in 14 separate experiments determined that the temperature increase, and bacterial inactivation was dependent on the presence of water. As the moisture content of the soil sample approached zero there was a distinct loss in the lethal effects of the microwaves. Table 2-8 shows that in the absence of water,

microbial cells are not inactivated by 1400 Watt, 2,450 M Hz microwave radiation.

Table 2-8. Effect of Microwave Radiation (2,450 M-Hz) on Microbes in the Lyophilized (freeze dried) State Dry and after Moistening (Wet).

Organism	$LD_{99.9\%}$ ($J \times 10^3$)	
	Dry	Wet
Escherichia coli	>240	16
Pseudomonas aeruginosa	>240	8
Salmonella typhimurium	>240	11
Serratia marcescens	>240	10
Staphylococcus aureus	>240	11
Bacillus cereus	>240	12
Azotobacter vinelandii	>240	12
Azotobacter chroococcum	>240	10
Bdellivibrio spp.	>240	22
Bdellovibrio spp.	>240	20
Bacteriophage (*E. coli* K-12)	>240	18
Bacteriophage (*E. coli*)	>240	18

The 99.9% lethal dose, $LD_{99.9\%}$ was obtained from graphs depicting the surviving fraction (irradiated/nonirradiated control).
(Source Vela and Wu, 1979)

In the freeze-dried, or lyophilized state, even at prolonged periods of time, the microbes tested did not absorb sufficient energy in the dry state to bring about any significant reduction in cell populations.

Typical industry standard radio frequency energy at 2,450 M Hz is absorbed and produces friction in water molecules which is transformed to heat which in turn denatures the proteins within microbial cells. Najdovski *et al.* (1991) concluded that only when sufficient water is present, conventional microwave ovens may be used for high level disinfection but not sterilization for highly contaminated microbiological labware. Aqueous suspensions of *Bacillus subtilis* and *Bacillus stearothermophilus* (concentration 10^6 spores per ml), showed complete inactivation, reduction of 6 logs, after exposure of 1400 Watt, 2,450 M Hz microwaves for a time period of 10

minutes and 20 minutes respectfully. Dry suspensions were prepared by pouring an aqueous suspension into polystyrene tubes, shaking, pouring out the liquid and leaving the tubes to dry. In the absence of water, dry suspensions of spores were not inactivated only a 4 log reduction was observed to occur.

Figure 2-10, shows how the ABB Sanitec Microwave Disinfection Unit loads infectious waste from containers that are automatically lifted into the feed hopper. This unit is self-contained in a steel cargo box and is completely automated with the key operating parameters of time, temperature, and screw speed monitored continuously by the microprocessor. Once loaded, the feed hopper door closes, air in the hopper is evacuated through two-stage filter system (including a HEPA filter) and the hopper is purged with high temperature steam (about 160°C) to prevent the possibility of airborne pathogens. A rotating arm feed and shredder is activated to shred the waste, rendering it non-recognizable. An interlock control prevents the operation of the shredder while the feed hopper door is open. Shredded waste passes through the screen and is wetted with high temperature steam to begin the thermal process and provide sufficient moisture to enhance microwave treatment. The shredded, moistened waste passes into a transfer hopper equipped with automatic level control sensors which control the movement of the waste into the microwave chamber which consists of six 1200 watt microwave generators. The treatment chamber is initially heated to a predetermined operating temperature (about 96 - 87°C) and is interlocked so that no waste is conveyed until the chamber reaches the required temperature. The microwaves heat the shredded waste from the inside out. Temperature sensors located throughout the the chamber regulate the conveyor's speed to insure that the shredded waste reaches operating temperature of about 97°C (205°F). Inlet and outlet temperatures of the hold section are monitored by sensors (which control the speed of the screw conveyor) and are automatically recorded on a chart recorder. An exit screw conveyor then discharges the treated waste from the equipment in to a storage/container for later disposal.

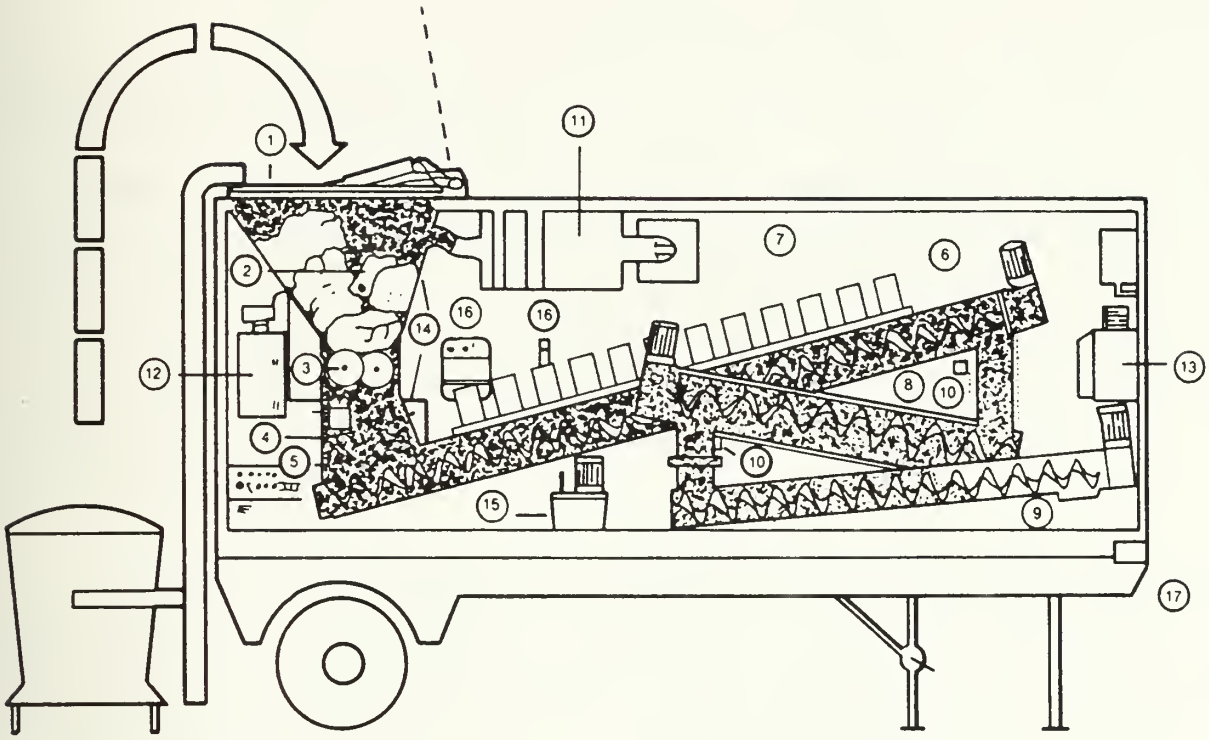

Process scheme of a mobile microwave-disinfection unit

1. Feeding hopper
2. Feeding crank
3. Shredder
4. Connecting hopper with inspection window
5. Level sensors
6. Main conveyor auger
7. Microwave generators
8. Temperature holding section
9. Discharge conveyor auger
10. Temperature sensors
11. Filter system, 2-stage
12. Water tank with pump and spraying connection
13. Steam generator
14. Steam connection
15. Hydraulic aggregate
16. Room heater
17. Container

Figure 2-10. Microwave Disinfection Unit, ABB Sanitec, 1992.

This unit passed a microbiological efficacy study of the system conducted in 1991 by a independent laboratory for the New York State Department of Health Alternative Regulated Medical Waste Treatment System Evaluation Program.

Destruction by Incineration

When operated properly, on-site incineration reduces the risk and cost of extra handing and transportation, destroys pathogens, reduces volume over 90% and can provide heat recovery for the steam boilers. Regardless of increasingly stringent state emission standards and emerging infectious waste treatment alternatives, the Office of Technology Assessment (OTA) (1990) considers incineration of medical wastes as the prevalent treatment method for U.S. health care facilities.

The process of incineration takes placed in a controlled chamber where heat is applied to raise the temperature to ignition, and oxygen is used to carry out combustion, converting infectious medical waste to inert mineral residues and gases. Briefly summarizing the principles as described in the EPA Hospital Incineration Operation and Maintenance Manual (1989); the goal of this process is for the complete combustion of the organic constituents in the waste stream.

Primary organic elements of biomedical waste consist of carbon (C), hydrogen (H), and oxygen (O), which generate the most energy and gas products. During theoretical complete combustion, carbon and hydrogen combine with oxygen from combustion air to form only carbon dioxide (CO_2) and water vapor (H_2O). However, in practice these are not the only end products to occur. Inorganic constituents are not destroyed during the combustion process, but are partitioned among the bottom ash or combustion gas incinerator effluent streams, and are therefore potential pollution problems. Sulfur (S), which is bound to the organic material, is oxidized during incineration to form vapor phase sulfur dioxide (SO_2) in direct proportion to the sulfur content of the waste. Nitrogen (N), which is a component of the combustion air or the waste stream "fuel", reacts in the

chamber to produce either "thermal" or "fuel" nitrogen oxides (NOx). Other potential hazardous compounds produced during poor operating conditions include emissions of hydrogen chloride (HCl), carbon monoxide (CO), polychlorinated biphenyls (PCBs), and polycyclic organics such as dioxins and furans.

In order to achieve complete combustion of the waste, a stoichiometric (lb air/lb waste) is required for completion of the reaction. Quantities of oxygen over the stoichiometric ideal amount is termed as "excess air". As previously described, red bag infectious waste is extremely variable. Table 2-9 lists the high variability of heating values and stoichiometric air requirements for plastics, paper, and infectious waste.

Table 2-9. Biomedical Waste Combustion Characteristics.

Waste constituent	Btu/lb	lb air/lb waste
Polyethylene	19687	16
Polystyrene	16419	13
Polyurethane	11203	9
PVC	9754	8
Paper	5000	4
Pathological	1000	1

(Source: Brunner and Brown, 1988)

As with incineration of other wastes, the four critical process parameters for infectious wastes are temperature, time, turbulence, and oxygen (or excess air). For combustion to occur, each organic constituent of the waste has a characteristic minimum ignition temperature that needs to be attained or exceeded in the presence of adequate oxygen. Once the ignition temperature is attained the residence time for that constituent should exceed the time required for complete combustion to take place. Turbulence speeds up the evaporation of liquids and increases the amount of oxygen that contacts the surface of a solid waste particle. Since complete combustion of paper waste requires a minimum temperature/residence time of 1400°F at 0.5 seconds, Brunner and Brown (1988), recommend that infectious waste should be at least equal to this minimum but not exceeding 1880°F.

When temperatures in the ignition chamber of the incinerator rise above 1880ºF, the noncombustible portion of the waste, which is the ash, begins to deform in a reducing atmosphere. Deformed ash can then harden into slag or clinker when it is moved into a cooler portion of the incinerator, or an area with additional oxygen present. Slag or clinker is capable of clogging air ports, disabling burners, and corroding refractory. Table 2-10 shows the deformation temperatures for ash that is burned in municipal solid waste.

Table 2-10. Ash deformation temperatures from burning solid waste.

Condition	Reducing atmosphere (ºF)	Oxidizing atmosphere (ºF)
Initial deformation	1880 - 2060	2030 - 2100
Softening	2190 - 2370	2260 - 2410
Fluid	2400 - 2560	2480 - 2700

(Source: Brunner, 1984)

The majority of hospital incinerators in use today are either of the multiple chamber, controlled-air, or rotary kiln type. Multiple chamber and controlled-air incinerators were the most popular because of their modular design and ability to meet particulate standards without extensive air pollution control equipment. Making rough calculation from available EPA fact sheets, Glasser *et al.* (1991) estimates that on a mass basis approximately 7.4 X 10^3 tons/day of overall medical waste was incinerated as compared to 78.4 X 10^3 tons/day for municipal solid waste. Stringent air pollution controls imposed on municipal solid waste incinerators have only recently been applied to medical waste incinerators although this treatment process is close to 10% of the U.S. solid waste incinerated.

Hospital incinerators discharge acid gases which include hydrogen chloride (HCl), sulfur dioxide (SO_2), and nitrogen oxide (NOx). Besides being irritants to both the human eye and lung, acid gases are potentially related to chronic pulmonary fibrosis and bronchitis. Additionally, acid rain is attributed to both sulfur dioxide and nitrogen oxide.

In the past, the majority of state regulations for medical waste incinerators consisted of periodic inspections for opacity. Table 2-11 reports ranges of regulations for Total Suspended Particulates and HCl based on charging rates that most of the states are now requiring.

Table 2-11. Ranges of Regulations for TSP and HCl in the U.S.

	Charging rate (lb/hr)		
Pollutant	(100 - 500)	(200 - 1,000)	(1,000 - 4,000)
Particulate (gr/dscf)	0.08 to 0.20	0.02 to 0.04	0.010 to 0.020
Hydrochloric acid (ppmv)	4 lb/hr	90% to 99%	30 ppm to 50 ppm

(Source: Hasselriis *et al.* 1991)

In addition to its toxicity, HCl is highly corrosive to the refractory lining in the incinerator and the stack. Because HCl is a stronger acid than SO_2, it will react more quickly with available alkaline compounds.

Several states are developing health risk based standards for medical waste incinerator toxic metal emissions which are now limited on the basis of ground level health risk concentrations. Hasselriis (1992) believes that removing toxics from gases after they exit the incinerator can be an unnecessary cost when the benefits of removing the the components from the waste stream is not considered. By working back the acceptable ground level concentrations to the stack and calculating the maximum allowable stack concentrations (MASC), Hasselriis points out that it is possible to determine the quantities of specific components that may be allowed in the waste stream to be burned. Under a EPA contract, Durkee and Eddinger (1991) characterized the emissions of medical waste incinerators and estimated that approximately 100% of the chlorine, 75% of the cadmium, and 50% of the lead in the waste that is incinerated will end up in the combustion gases. Table 2-12 calculates the chemical composition of the waste and products of combustion from a typical medical waste starved-air incinerator.

Table 2-12. Chemical Composition of Waste and Products from Incineration

Composition	%	lb/ton	Products of Combustion	lb/ton
Carbon	33.3	666	Carbon dioxide	1,693
Hydrogen	5.9	118		
Oxygen	11.5	230	Oxygen	512
Chlorine	1.0	20	HCl	20
Nitrogen	3.0	6	Nitrogen	5,820
Sulfur	2.0	4	Sulfur dioxide	8
Water	23.5	470	Water	1,127
Inerts	24.5	486	Flyash	3
			Residues	486
Lead			Lead	0.057
Iron			Iron	0.007
Cadmium			Cadmium	0.0066
Manganese			Manganese	0.0004
Chromium			Chromium	0.00036
Arsenic			Arsenic	0.00028
Total:		2,000		9,099.07164

(Source: Hasselriis, 1990)

Hasselriis (1990) points out that the temperature of the furnace is controlled by the large quantity of nitrogen which is the excess air needed to maintain the combustion reaction. The 20 lb/ton of HCl emissions is converted to a dry volume concentration of 1,000 ppm. A total of 0.07164 lb/ton of metals theoretically could be found in the fly ash. Table 2-13 shows the component composition of infectious medical red-bag and typical municipal solid wastes. As predicted, the medical waste contains a much higher percentage of disposable items made of plastics as compared to typical municipal solid waste. Paper is the main component of both red-bag and municipal waste and is a significant source of metals. Pure and recycled paper, including magazines and junk mail can contain up to 2.6 ppm lead, 0.4 ppm cadmium, and 0.13 ppm mercury by weight.

Table 2-13. Composition of Infectious and Typical Municipal Wastes.

Composition	Red-Bag (%)	Municipal waste (%)
Paper	31.0	35.6
Cardboard	0.0	10.4
Plastics	29.0	9.5
Rubber	12.0	1.4
Textiles	5.0	2.5
Food	1.0	10.1
Yard Waste	0.0	15.0
Glass	3.2	6.4
Metals	1.1	5.1
Fluids	17.7	0.0
Misc organics	0.0	5.4
Total	100.0	100.0

(Source: Hasselriis, 1990)

Table 2-14 reports the following percentage of plastic types in hospital waste.

Table 2-14. Percentages of Plastic in Waste

Component	Red-bag (%)
Polyethylene	45
Polypropylene	15
PVC	15
Polycarbonate	11
Polystyrene	4
Mixed	11

(Source: Brown, 1989)

Estimating that PVC contains approximately 45% chlorine, the following calculation for HCl emissions can be made.

(29% plastics/waste)(15% PVC /plastics)(45% Cl/PVC) = 2% Chlorine/waste

Assuming an emission factor for red-bag infectious waste is 40 lb/ton, HCl concentration emitted would equate to approximately 1,300 ppm by volume. Without any HCl emission controls installed, and a charging rate in the 1,000 to 4,000 lb/hour range, this incinerator would require a 96% control in order to reduce the emissions to the 50 ppm standard. A similar calculation for municipal solid waste can be made assuming a conservative content of 10% PVC as follows:

(9.5% plastics/waste)(10% PVC /plastics)(45% Cl/PVC) = 0.4% Chlorine/waste

Using the same emission factor for red-bag infectious waste (40 lb/ton), HCl concentration emitted would equate to approximately 300 ppm by volume. Therefore, one inexpensive method recommended by Hasselriis (1992) would be to combine hospital general refuse, which is similar to municipal waste, with red-bag infectious waste during incinerator charging operations.

As mentioned previously, heavy metal combustion products partition to both the bottom ash and the fly ash. Since the temperature of the combustion flame is directly related to the volatilization of the metals in the fly ash, maintaining as low a furnace temperature as possible should reduce the quantity of metals in fly ash. Brady (1991) demonstrated that from an uncontrolled medical waste incinerator over 60% of the total particulate was less than 1 μm in size using a burner temperature of 2,150 ºF as compared to 15% less than 1 μm, for the lowest burner temperature tested at 1,350 ºF.

Products of incomplete combustion, dibenzo-p-dioxins and dibenzofurans have raised significant concern from the general public residing next to medical waste incinerators. These compounds have been found to cause chloracne in humans and are fatal to animals in extremely low doses. Efficient combustion reduces the organic carbon matrix rings that react with oxygen and water, but does not totally eliminate dioxins and furans. One theory for the formation of dioxins and furans is from the combination of chloropenols or polychlorinated biphenyls precursors in the oxygen starved zones that exist in a multiple chamber incinerator. For incinerators without any control devices installed, reducing the stack

emperature can cause dioxins to condense out so they can be collected. Reducing the chlorine content of the waste stream should also reduce dioxin nd furan production.

In July 1991, the California Air Resources Board promulgated an air oxic control measure requiring all incinerated biomedical waste to reduce dioxin emissions by 99%, or to a concentration no greater than 10 ng/kg. The oard tested eight biomedical waste incinerators which had dioxin emission anging from 0.0003 to 14,140 ng/kg of waste burned. This measure was put nto effect after completion of a multipathway risk assessment estimated a igh end risk of dioxin exposure and development of cancer to be 250 chances er million. This measure was estimated to reduce the individual exposure nd cancer development risk to 3 chances per million but in turn increased he treatment costs $0.10 to $0.35 per pound over current incinerator costs.

Fry (1990) calculated that by lowering the stack temperature from 500 ºF o 165 ºF that total dioxin and furan emissions were reduced from 1,000 ng/m^3 to 10 ng/m^3. With these results he concluded that wet scrubbers were ffective in controlling acids, organics, and metals by condensation. It appears hat Brunner and Brown (1988) disagreed with this recommendation earlier, ointing out that organic matter is hydrophobic and that the majority of the arbonaceous particulate material discharging from a biomedical waste ncinerator will pass through a wet scrubber particulate control system. They urther recommend that dry scrubbing systems, such as, baghouse filters, lectrostatic precipitators, and dry scrubbers will remove the particulate natter of concern as well as metals, HCl, SO_2 and NOx. But, due to the high apital and subsequent operation and maintenance costs, most hospitals that re unable to afford this equipment will have administrators opting for off-ite incineration treatment.

Hasselriis (1992) concludes that small on-site medical waste ncinerators even without any emission controls may not be the health risk enerally assumed by the public. Provided that an adequate stack height and o large buildings are nearby, a dilution factor of 100,000 can be obtained which results in acceptable ground level concentrations.

Recommendations to reduce health risks associated with biomedical waste incineration were summarized from Glasser et al. (1991) as follows:

- Reduction of hexavalent chromium (Cr^{+6}) emissions to negligible levels is possible by removing sharps from from the waste stream to be incinerated.

- Require manufacturer certification that products that will be incinerated after use do not contain lead (Pb), cadmium (Cd), or chromium (Cr). Outer casing of the alkaline batteries used in disposable surgical examination flashlights contain Cd.

- Reduce HCl emissions by development of substitutes for chlorinated plastics. Simplest method would be the return to the use of reusable products that could be sterilized in the autoclave.

- Limit the possibility of dioxin, furan, or precursor formation by increased operator training, improved waste feeding practices and a routine maintenance program to enhance combustion.

Studies were conducted to determine minimum operating temperatures of incinerators to prevent the release of spores. Barbeito and Shapiro (1977) determined that a residence time of 12.5 seconds and operating temperatures of 1400º F in the ignition chamber, 1600º F in the secondary chamber, and 1050º F at the top of the stack was required to sterilize both solid and liquid laboratory wastes challenged with *Bacillus subtilis* spores in a semi-portable pathological incinerator. Barbeito and Gremillion (1967) also evaluated the effectiveness of a gas expansion 4,000 lb/hr industrial incinerator designed for a 50:50 mixture of wet and dry refuse to destroy a liquid suspension of *Bacillus subtilis* spores. This study determined that a temperature of 575º F and residence time of 41 seconds in the firebox was required to kill a concentration of 5.3×10^9 spores per cubic foot of air flowing through the incinerator.

Blenkharn and Oakland (1989) sampled flue gas from the flue exhaust duct, just prior to the base of the vertical exhaust stack on a 1988 controlled-air

incinerator. With the ignition chamber and secondary chamber operating at 1472°F and 1832°F respectively, 15 to 600 liter samples were taken using a Casella slit apparatus throughout the three-hour test period. Culture of the samples revealed that a range of 0 to 400 cfu/m^3 viable bacteria were identified consisting of predominantly spore-forming Bacillus species, *Staphylococcus aurreus* and *Pseudomonas fluorescens* were also recovered but in lower numbers. Reasons for the emission are summarized as follows:

- Rapid transit times of the fine particles suspended in the air within the incinerator.
- Inadequate combustion due to the presence of large volumes of liquid in the waste stream.

The bacteria released from the secondary ignition chamber would be subject to additional heat on the way to the top of the stack, and dispersion at the point of discharge should render the exhaust gases harmless. Therefore, Blenkharn and Oakland (1989) point out that careful consideration must be given to the position of exhaust stacks relative to adjacent buildings.

Allen *et al.* (1989) investigated the potential for releases of pathogenic bacteria into the ambient air during the operation of a biomedical incinerator. A standard red bag waste load was used consisting of two streak plates of *Bacillus subtilis,* unsterilized wadded newspaper, copy paper, cardboard and two liters of tap water. This standard load was similar to hospital waste but with a lower percentage of plastic items. The bags were burned in a retort pathological incinerator for a 30 minute (loading through burndown) cycle with both the ignition and secondary chamber temperatures maintained at 1400º F. Located in a large primary care hospital, past operation of this incinerator resulted in a highly visible plume during treatment of routine red bag waste which signified incomplete combustion. The incinerator stack gas and ambient outdoor air were sampled on six different days using two Shipe impinger, water trap, critical flow orifice and a pump for determination of the bacteria genera and species. Five samples were taken of the indoor air in the incinerator room to confirm the presence organisms but not simultaneous with the stack and ambient air samples. Table 2-15 reports the organism identified and frequency of occurrence during the sampling conducted.

Since no vegetative cells or spores of *Bacillus subtilis* were isolated from the stack gas, the source of bacteria found was not from the waste loads incinerated. The four species found present in the incinerator room samples consisted of 91 of the 96 identified bacteria in the stack gas. Therefore, most likely source of the stack gas bacteria was the incinerator room air that is drawn into the ignition and secondary chambers (Allen *et al.* 1989).

Table 2-15. Emission of Airborne Bacteria from a Hospital Incinerator.

Sample	Organism	Frequency
Stack gas	*Bacillus megaterium*	1
	Bacillus cirulans	1
	Staphylococcus epidermidis	2
	Staphylococcus saprophyticus	1
	Staphylococcus simulans	61
	Staphylococcus warneri	25
	Staphylococcus hominis	2
	Staphylococcus auricularis	3
Outdoor air	*Bacillus megaterium*	2
	Bacillus pumilus	2
	Bacillus cereus	1
	Bacillus coagulans	1
	Staphylococcus epidermidis	5
	Staphylococcus saprophyticus	3
Incinerator room	*Staphylococcus epidermidis*	Present
	Staphylococcus saprophyticus	Present
	Staphylococcus hominis	Present
	Staphylococcus auricularis	Present

(Source: Allen *et al.*, 1989)

Disagreement within the ranks of the scientific community over the emission of viable pathogenic bacteria from a hospital incinerator will provide additional justification for shutting down currently operating on-site incinerators that already may have difficulty complying with some of the state imposed emission standards.

Conclusions

My first two conclusions agree with the Society for Hospital Epidemiology of America position paper on medical waste (Rutala and Mayhall, 1992).

1) In order to reduce the liquid content in infectious waste bags, blood and body fluids from non-isolated patient care areas could be poured directly down designated sinks.

Provided that the health care worker takes proper precautions to prevent splashback exposure, blood and body fluids discharged into the sewer are diluted to very low concentrations when combined with other sanitary effluents. EPA (1986) identified sewers as an acceptable disposal option for blood and blood products if secondary treatment is used at the plant serving the health care facility. The microbial loading of liquid blood and body fluid products as a raw sewage component is negligible in comparison to the bacterial and viral content in human feces. Microbial loading in feces can be as high as 10^{10} bacteria per wet weight gram. Although these bacteria are considered a normal resident of the large intestine, such a high count of these microbes can cause disease if they gain entrance to unusual sites such as the urinary tract, wounds, or burns.

Even though approximately 23% of hospitals surveyed disposed of blood and body fluids to sewers (OTA, 1990), there are still some questions that need to be addressed. Is the risk of infection to plumbers working on these designated drain lines higher due to dried blood wastes inside the pipes compared to regular sanitary drain lines? When heavy rains result in combined sewer overflows bypassing the sewage treatment plant, will the pathogenic loading to the receiving waterways be significantly increased? Rough comparisons as previously made between human feces and blood/body fluids would answer no to both of these questions, but further research in this area should be completed before nationwide implementation of this disposal recommendation.

2) With the exception of sharps and microbiological culture wastes, all other infectious wastes, if properly contained, could be placed directly into a sanitary landfill without treatment.

As previously cited in several studies, in general, municipal solid waste contains more pathogenic microorganisms than infectious medical waste. The contribution of microorganisms in general household waste includes putrescible foods, soiled disposable diapers, pet feces, and facial tissues. Future solid waste programs could possibly reduce the microbial loading from municipal waste, but they would be very difficult to implement.

There is no evidence that a waste industry worker has ever developed an infection due to infectious medical waste (Rutala and Mayhall, 1992). Disease transmission for either of these solid wastes would require gross microbial contamination of a specific portal of entry, such as an open wound.

Pahren (1987) summarized previous laboratory and field studies on the transport of pathogenic microorganisms from solid waste leachate and concluded that enteric viruses and bacteria of concern are unlikely to migrate through soils into groundwater since they were largely absorbed or inactivated by the environmental conditions in the landfill. Sobsey (1978) conducted a field survey of 21 landfill sites in the U.S. and Canada and reported only two infectious poliovirus per 11.8 gallons of raw leachate sample. Therefore properly handled infectious waste could be disposed of in a sanitary landfill without any treatment. But, considering the limiting capacity of landfills, decisions will have to be made concerning the effectiveness of new treatment technologies.

Regulations promulgated in the 1988 Medical Waste Treatment Act requiring infectious waste is to be rendered unrecognizable could be included in Subtitle J of RCRA when this act is reauthorized in 1993.

3) Therefore, based on the review of on-site treatment systems currently in use, it appears that there would be less of a operator exposure risk to pathogenic microorganisms if physical maceration, hammer-milling, or compaction take place after the microbial load is sufficiently reduced.

Equipment failures in the mechanical/chemical or microwave disinfection systems during waste processing could result in infectious waste bags that are torn open and left untreated. The health care facility could possibly be liable for the exposure of the technician to concentrations of infectious pathogens greater that 10^6 or more per gram of waste component. For this reason, as a facilities engineer, I would recommend a more fail safe system of treatment like that of the San-i-pak high vacuum autoclave/compaction unit which sterilizes the infectious waste prior to a compaction or optional shredding process. In the event of equipment failure for this system the infectious waste will still remain safely contained in autoclave bags that could be retrieved and treated at a different location.

BIBLIOGRAPHY

Allen, Robert J., Cary R. Brenniman, Rosemary R. Logue, and Valeria A. Strand. "Emission of Airborne Bacteria from a Hospital Incinerator." *JAPCA*. 39, 2 (1989): 164-168.

American Sterilizer Company. Technical Data Sheets on Eagleguard LV Retort/Autoclave. 1992

Angelotti, R, Foter, M. J., and Lewis, K.H. "Time-Temperature Effects of Salmonellae and Staphylococci in Foods." *Applied Microbiology*. 9 (1961): 308-315.

Asea Brown Boveri, ABB Sanitec. Technical Data Sheets and Personal Communication Concerning Microwave Disinfection Unit. Wayne, New Jersey, September 1992.

Baker, J.C. "Chlorine in Sewage and Waste Disposal." *Canadian Engineering Water Sewage*. 50 (1926): 127 - 128.

Barbeito, Manuel S., and Max Shapiro. "Microbiological Safety Evaluation of a Solid and Liquid Pathological Incinerator." *Journal of Medical Primatology*. 6 (1977): 264-273.

Barbeito, Manuel S., and Gardener G. Gremillion. "Microbiological Safety Evaluation of an Industrial Refuse Incinerator." *Applied Microbiology*. 16, 2 (1967): 291-295.

Blenkharn, J. I. and D. Oakland. "Emission of Viable Bacteria in the Exhaust Flue Gases from a Hospital Incinerator." *Journal of Hospital Infection*. 14 (1989): 73-78.

Block, Seymour S. "Infectious Medical Wastes: Treatment and Sanitary Disposal." in *Disinfection, Sterilization, and Preservation*. Seymour S. Block, Ed. Malvern, PA: Lea & Febiger, 1991.

Bond, Walter W., Martin S. Favero, Norman J. Peterson. "Viral Hepatitis B: Aspects of Environmental Control." *Health Laboratory Science*. 14 (1977): 235-252.

Brady, J. D. "Recent developments in the pollution control systems for chemical and infectious waste incinerators." *Mid-west American Institute of Chemical Engineers Meeting*, St. Louis, MO, February, 1991.

Brown, H. L. "Thomas Jefferson University Hospital Waste Characterization Study." Drexel University, Philadelphia, 1989.

Brown, M.R.W., and Jack Melling. "Inhibition and Destruction of Microorganisms by Heat." in *Inhibition and Destruction of the Microbial Cell*. W.B. Hugo , Ed. New York: Academic Press, 1971: 1-37.

Brunner, Calvin, R., and Courtney H. Brown. "Hospital Waste Disposal by Incineration." *JAPCA* . 38, 10 (1988): 1297-1309.

Brunner, Calvin, R. *Incineration Systems: Selection and Design*. Van Nostrand Reinhold, New York, 1984.

Cavalieri, L.F., and B.H. Rosenberg. "Hydrogen Bond Role in Denaturation of Nucleic Acids." *Journal of American Chemical Society*. 79 (1957): 5352 - 5357.

Centers for Disease Control. Recommendations for Prevention of HIV Transmission in Health Care Settings. *Morbidity and Mortality Weekly Report*. 36, (1987): 2S - 17S.

Chick, H., and Martin, C.J. "Heat Coagulation of Proteins." *Journal Physiology (London)* 40 (1910): 404 - 430.

Collins, C. H. *Laboratory-Acquired Infections*. Butterworth & Co Ltd. 1983.

Creager, Joan G., Jacquelyn G. Black, and Vee E. Davidson. *Microbiology: Principles and Applications*. Prentice-Hall, Inc., 1990.

Denys, Gerald A. "Microbiological Evaluation of the Medical Safe TEC Mechanical/Chemical Infectious Waste Disposal System." *Presented at the 89th Annual Meeting of the American Society for Microbiology*, New Orleans, Louisiana, 1989.

Denys, Gerald A. and B.A. Street. "Inactivation of Coliphage in Mechanical/Chemical Infectious Waste Disposal System." *Presented at the 91st Annual Meeting of the American Society for Microbiology*, Dallas, Texas, 1991.

Donnelly J.A. and P.V. Scarpino. *Isolation, Characterization, and Identification of Microorganisms from Laboratory and Full-Scale Landfills*. Solid and Hazardous Waste Research Division, Municipal Environmental Research Laboratory, U.S. EPA, PB84-212737, 1984.

Doucet, L.G. "Update of Alternative & Emerging Medical Waste Treatment Technologies." Paper presented at the *Joint Services Health Facilities Symposium*, Atlanta, Georgia, May 21, 1992.

Durkee, K. R. and J. A. Eddinger, "Status of the U.S. EPA regulatory program for Medical Waste Incinerators - Test Program and Characterization of Emissions." *Incinerator Conference on Thermal Treatment of Radioactive, Hazardous, Chemical, Mixed, and Medical Wastes,* Knoxville, TN, May 13-17, 1991.

Edberg, Stephen C. "Methods of Quantitative Microbiological Analyses that Support the Diagnosis, Treatment, and Prognosis of Human Infection." *Critical Reviews in Microbiology.* September (1981): 339 - 397.

French, Morris L. V. and Harold E. Eitzen. "Report on the Microbiological Effectiveness of the Medical Safe TEC Waste Management System." *Indiana University, Department of Infection Control.* 1984.

Friberg, L. Quantitative Studies on the Reaction of Chlorine with Bacteria in Water Disinfection." *ACTA Pathological Microbiology Scandinavian.* 38 (1956): 135 - 144.

Friberg, L. "Further Quantitative Studies on the Reaction of Chlorine with Bacteria in Water Disinfection." *ACTA Pathological Microbiology Scandinavian.* 40 (1957): 67 - 80.

Fry, B. "Technical support document to proposed dioxins and cadmium control measure for medical waste incinerators." *California Air Resources Board,* Sacramento, CA, May, 1990.

Glasser, H., D.P.Y. Chang, and D.C. Hickman. "An Analysis of Biomedical Waste Incineration." *Journal of the Air Waste Management Association* 21, 9 (1991): 1180-1188.

Goldblith, Samuel A., and Daniel I. C. Wang. "Effect of Microwaves on Escherichia coli and Bacillus subtilis." *Applied Microbiology.* 16, 6 (1967): 1371-1375.

Green, D.E., and P.K. Stumpf. "The Mode of Action of Chlorine." *Journal of American Water Works Association.* 38 (1946): 1301 - 1305.

Green, Alex E. S. *Medical Waste Incineration and Pollution Prevention.* New York: Van Nostrand Reinhold, 1992.

Haas, Charles N. *Disinfection in Water Quality and Treatment.* 4th ed; Frederick W. Pontius, Ed. McGraw Hill, (1990): 877 - 924.

Halvorson, H.O.. Hanson, R., and Campbell, L.L. (Eds.) In Spores V. Fifth International Spore Conference. *American Society for Microbiology.* Washington, DC. 1972.

Hasselriis, F. *Refuse-derived Fuel Processing,* Stoneham, MA, Butterworth, 1984.

Hasselriis, F. "Relationship Between Waste Composition and Environmental Impact." *Paper 90-38.2 presented at the 83rd Annual Meeting of the Air and Waste Management Association,* Pittsburgh, June 1990.

Hasselriis, F., D. Corbus, and R. Kasinathan. "Environmental and Health Risk Analysis of Medical Waste Incinerators Employing the State-of-the-art Emission Controls." *Paper 91-30.3 presented at the 84th Annual Meeting of the Air and Waste Management Association,* Vancouver, Canada, June 1991.

Hasselriis, F. in *Medical Waste Incineration and Pollution Prevention.* Green, Alex E. S. ed. New York: Van Nostrand Reinhold, 1992.

Henderson D.K. "HIV-1 in the Health Care Setting." In: Mendell G.L., Douglas R.G., Bennett J.E., eds. *Principles and Practice of Infectious Diseases.* 3rd ed. New York: Churchill Livingstone, (1990): 2221 - 2236.

Infectious Waste News. *Report Cites Industry Views On Markets, Trends, and Opportunities* 7, 19, September 14, 1992.

Jager, E., L. Xander, and H. Ruden. Microbiological Studies of Wastes of Various Specialties at a Large and Small Hospital in Comparison to Housekeeping Waste." *Zentralbl. Hyg. Umweltmed.* 188 (1989): 343 - 364.

Jette, L.P., and S. Lapierre. "Evaluations of a Mechanical/Chemical Infectious Waste Disposal System." *Infection Control and Hospital Epidemiology.* 13, 7 (1992): 387 - 393.

John Hopkins University, Public Health Department Advisory, 1981.

Joslyn, L.J. "Sterilization by Heat." in *Disinfection, Sterilization, and Preservation.* Seymour S. Block, Ed. Malvern, PA: Lea & Febiger, 1991.

Kalinowski, G., Wiegand, H., and Ruden, H. "Microbial Contamination of Hospital Waste." *Zentralbl. Bakteriol. Microbiol. Hyg.* 178 (1983): 364 - 379.

Katzin, L. I., Sandholzer, L. A. and Strong, M. E.: Application of the Decimal Reduction Time Principal to a Study of the Resistance of Coliform Bacteria to Pasteurization. *Journal of Bacteriology.* 45 (1943): 265-272.

Kinman, R., J. Rickabaugh, J. Donnelly, D. Nutini, and M. Lambert. *Evaluations and Disposal of Waste Materials within 19 Test Lysimeters at Center Hill,* EPA-600/2-86-035, Hazardous Waste Engineering Research Laboratory, Cincinnati, 1986.

Knox, W.E., P.K. Stumpf, D.E. Green, and V.H. Auerbach. "The Inhibition of Sulfhydryl Enzymes as the Basis of the Bactericidal Action of Chlorine. *Journal of Bacteriology*. 55 (1948): 451 - 458.

Kowal, N.E. *Health Effects of Land Treatment: Microbiological*. EPA-600/1-82-007, Health Effects Research Laboratory, Cincinnati, 1982.

Lauer, James L., Donald R. Battles, and Donald Vesley. "Decontaminating Infectious Laboratory Waste by Autoclaving. *Applied and Environmental Microbiology*. 44, 3 (1982): 690 - 694.

Lesser, M.A. "Hypochlorites as Sanitizers." *Soap Sanitation Chemistry*. 25 (1949): 119 - 139.

Levine, M.M. Cholera in Louisiana: Old Problem, New Light. *New England Journal of Medicine* . 302 (1980): 345.

Magoon, C.A. "Studies on Bacterial Spores II. Thermal Resistance as Affected by Age and Environment." *Journal of Bacteriology*. 1, (1926): 253 - 283.

Marchese, J.T., G.B. Marshall, R.F. LaValle, and W.H. Greene. "Regulated Medical Waste Disposal at a University and University Hospital: Future Implications." *Presented at the Third International Conference on Nosocomial Infections.* July 31 - August 2, 1990. Atlanta, Ga.

Marrack, D. "Hospital Red Bag Waste." *Journal of the Air Pollution Control Association*. 38, (1988): 1309 - 1312.

McDermott, W. Microbial Persistence. *Yale Journal of Biological Medicine*. 30 (1958) 257-291.

Medical Safe TEC. Technical Data Sheets and Personal Communication Concerning Mechanical/Chemical Disinfection Disposal System. Indianapolis, Indiana. September 1992

Mishiro, Y., and Ochi, M., *Nature*. London, 211 (1966): 1190.

Najdovski L., A. Z. Dragas, and V. Kotnik. "The Killing Activity of Microwaves on Some Non-sporogenic and Sporogenic Medically Important Bacterial Strains." *Journal of Hospital Infection*. 19 (1991): 239-247.

Ontario Ministry of the Environment. *"Incinerator Design and Operating Criteria, Volume II, Biomedical Waste Incinerators."* October 1986.

Pahren, H.R. "Microorganisms in Municipal Solid Waste and Public Health Implications." *CRC Critical Reviews in Environmental Control*. 17 (1987): 187-228.

Perkins, John J. *Principles and Methods of Sterilization in Health Sciences*.. Springfield, Illinois: Charles C. Thomas, 1969.

Pflug, I.J. "Principles of the Thermal Destruction of Microorganisms." in *Disinfection, Sterilization, and Preservation*. Seymour S. Block, Ed. Malvern, PA: Lea & Febiger, 1991.

Plotkin, S. A. and M. Katz. "Minimum Infective Doses of Viruses for Man by the Oral Route." in *Transmission of Viruses by the Water Route*. Ed. G. Berg, John Wiley & Sons, New York, 1967.

Powell, F.C. "Air Pollutant Emissions from the Incineration of Hospital Wastes, the Alberta Experience." JAPCA. 37 (1987): 836 - 838.

Rahn, O. "Physical Methods of Sterilization of Microorganisms." *Bacterial Review*. 9 (1945) 1-47.

Reinhardt, Peter A., and Judith G. Gordan. *Infectious and Medical Waste Management*. Chelsea, Michigan: Lewis, 1991.

Rutala, William A., Marsha M. Stiegel, and Felix A. Sarubbi. "Decontamination of Laboratory Microbiological Waste by Steam Sterilization. *Applied and Environmental Microbiology*. 43, 6 (1982):: 1311 - 1316.

Rutala, William A., and C. Glen Mayhall. "Society of Hospital Epidemiology of America Position Paper: Medical Waste." *Infection Control and Hospital Epidemiology*. 13 (1992): 38-48.

San-i-pak Inc. Technical Data Sheets and Personal Communication Concerning High Vacuum Sterilizer/Compactor. Tracey, California, September 1992.

Schiff, G.M., G.M. Stefanovic, B. Young, and J.K Pennekamp. *Determination of Minimal Infectious Dose of an Enterovirus in Drinking Water*. EPA-600/1-83-004, Health Effects Research Laboratory, Cincinnati, 1983.

Senior, Eric and Subari B. Shibani. "Landfill Leachate." in *Microbiology of Landfill Sites*. Eric Senior Ed. CRC Press, Boca Raton, Florida, 1990.

Smith, D. T., and E. R. Harrell. "Fatal *coccidioidomycosis*. Case of Laboratory Infection." *American Review of Tuberculosis*. 57 (1948): 368 - 374.

Sobsey, M.D. "Field Survey of Enteric Viruses in Solid Waste Landfill Leachates." *American Journal of Public Health*. 68 (1978): 858-864.

Stanier, Roger Y. *The Microbial World*. Englewood Cliffs, New Jersey: Prentice-Hall, 1986.

Stinson, Margaret C., Mitchell S. Galanek, Ann M. Ducatman, Francis X. Masse, and Daniel R. Kuritzkes. "Model for Inactivation and Disposal of Human Immunodeficiency Virus and Radioactive Waste in a BL3 Facility." *Applied and Environmental Microbiology*. 56, 1 (1990): 264 - 268.

Stinson, Margaret C., Barbara L. Green, Charles J. Marquardt, and Alan M. Ducatman. "Autoclave Inactivation of Infectious Radioactive Laboratory Waste Contained Within a Charcoal Filtration System." *Health Physics*. 61, 1, (1991): 137 - 142.

Straddling, P. *Lancet*. ii (1953): 1185 - 1186.

Theodore, Louis. *Air Pollution Control and Waste Incineration for Hospitals and other Medical Facilities*. New York: Van Nostrand Reinhold, 1990.

Tieszen Myles E. and James C. Gruenberg. "A Quantitative, Qualitative, and Critical Assessment of Surgical Waste: Surgeons Venture Through the Trash Can." *JAMA*. 267, 20 (1992): 2765 - 2768.

Trigg, J.A. *Microbial Examination of Hospital Solid Wastes*. West Virginia University, Morgantown M.S. Thesis 1971.

Trost, M., and Z. Filip. Microbiological Investigation on Refuse from Medical Consulting Rooms and Municipal Refuse." *Zentralbl. Bakteriol. Hyg. (B)* 181 (1985): 159 - 172.

Trueman, J.R. "The Halogens." in *Inhibition and Destruction of the Microbial Cell;* W.B. Hugo, Ed. New York, Academic Press (1971): 137 - 171.

U.S. Congress, Office of Technology Assessment. *Finding the Rx for Managing Medical Wastes*. OTA -O-459, Washington DC: 1990.

U.S. Department of Health and Human Services. *The Public Health Implications of Medical Waste: A Report to Congress*. Agency for Toxic Substances and Disease Registry, 1990.

U.S. Environmental Protection Agency. *Hospital Waste Combustion Study, Data Gathering Phase, Final Draft*. Radian Corp. October 1987.

U.S. Environmental Protection Agency. *Guide for Infectious Waste Management*. EPA/530-SW-86-014 May 1986.

U.S. Environmental Protection Agency. *Operation and Maintenance of Hospital Medical Waste Incinerators*. Roy Neulicht, Mark Turner, Dennis Wallace, and Stacy Smith of Midwest Research Institute for the Office of Air Quality Planning and Standards, March 1989.

Vela, G.R., and J.F. Wu. "Mechanism of Lethal Action of 2,450-MHz Radiation on Microorganisms." *Applied and Environmental Microbiology*. 37, 3 (1979): 550-553.

Thesis
D5656 DiDomenico
c.1 Inactivation of patho-
genic microorganisms in
infectious medical waste.

3 2768 00025040 1